Product introduction and application examples

2026-11
EC-8139-B
Rev.1

Ethernet Lightning Surge Protector
Ideal for Surveillance Cameras Applications



CE

M-RESTER Series Lightning Surge Protectors for Electronics Equipment

Model MDCAT

Life monitor

Model MDCAT-A

Works with PoE, PoE Plus

- IEC 61643-21 (Category C1, C2) compliant
- Adheres to cable categories CAT5e, CAT6
- Can be grounded through DIN rail

See Terminology Definitions in page 7 for further details

This is how surveillance cameras are protected from lightning!

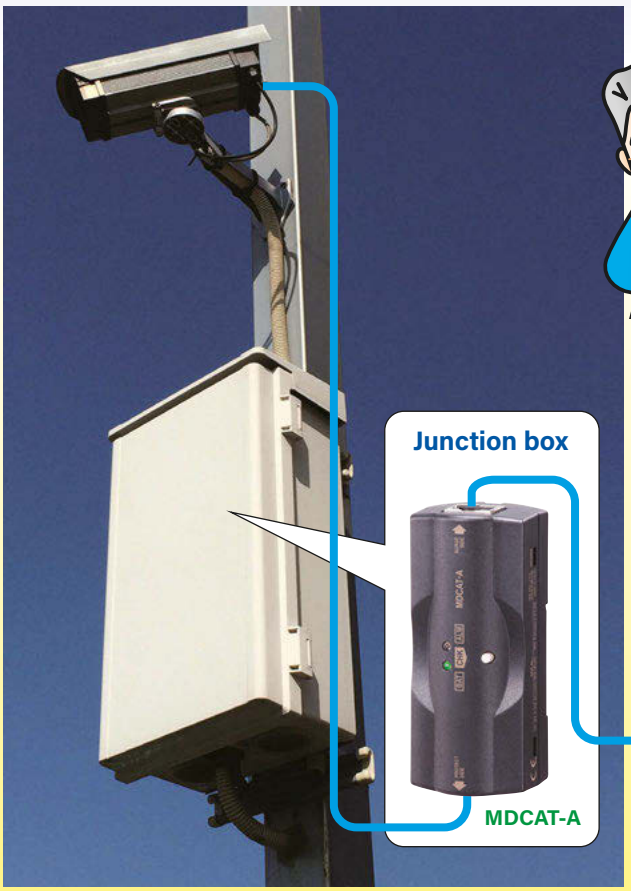

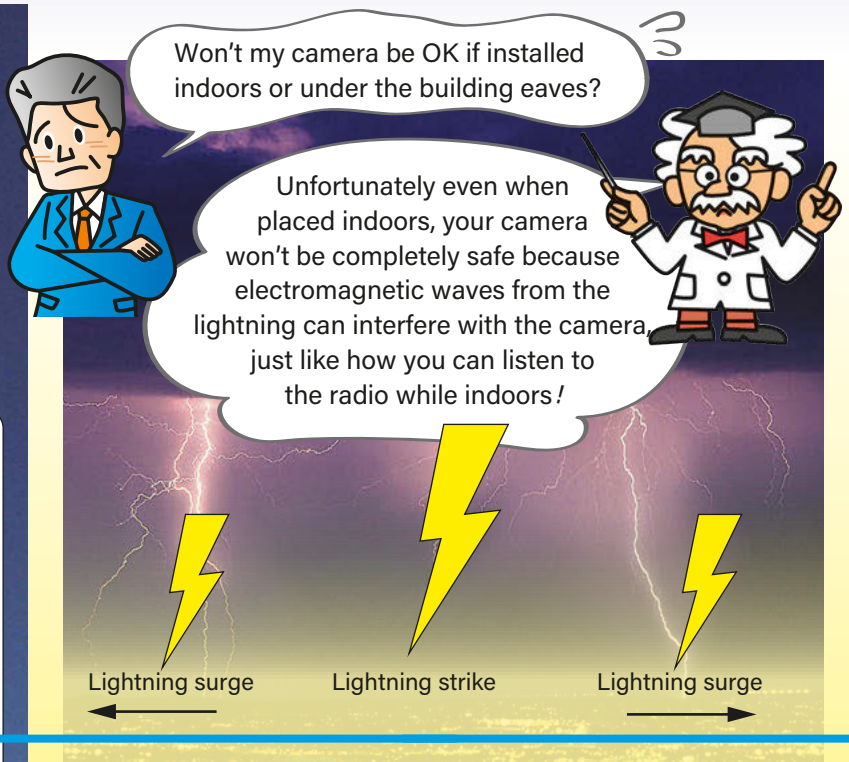

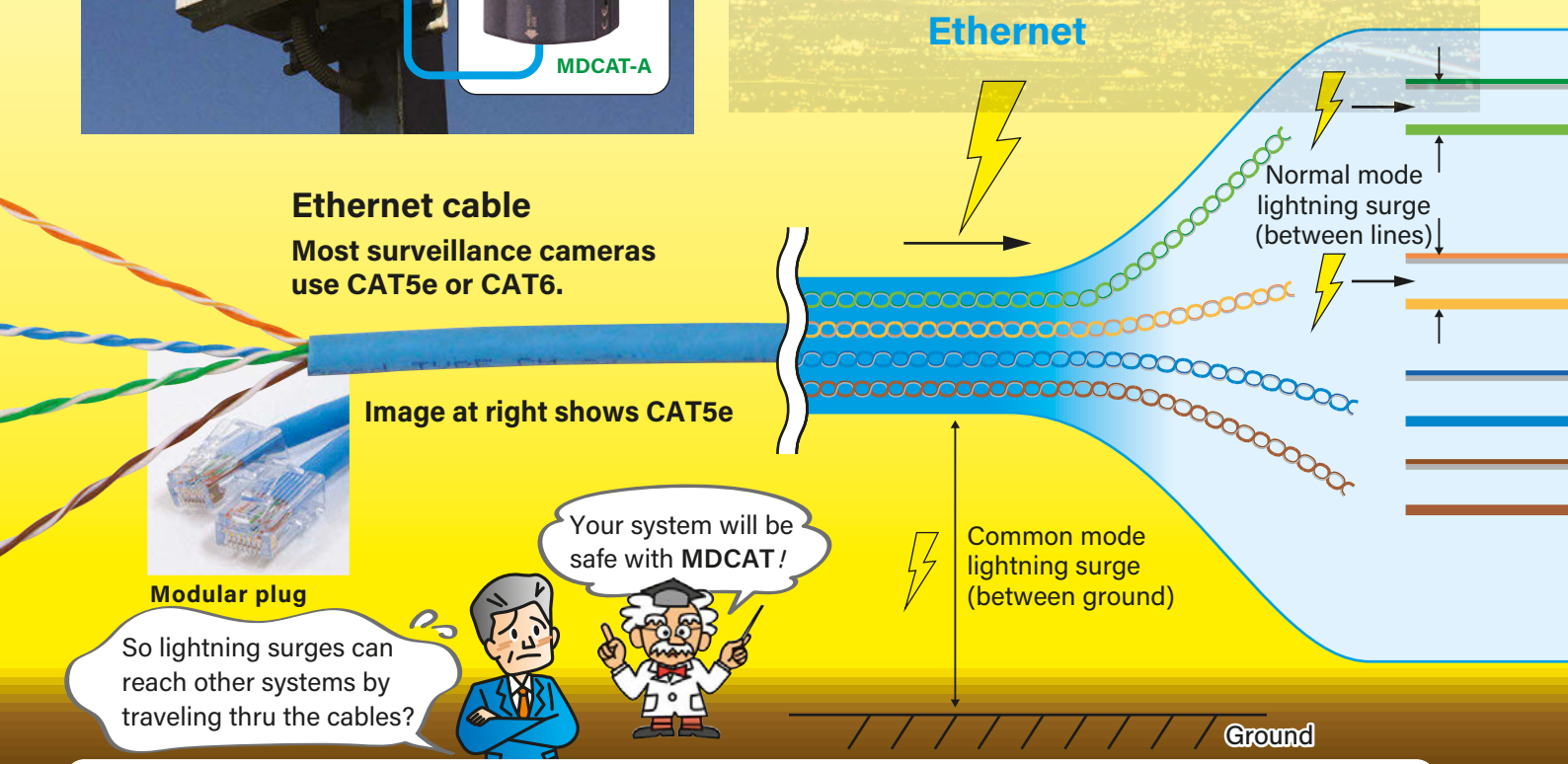

Ethernet cable

Most surveillance cameras use CAT5e or CAT6.

Image at right shows CAT5e

Modular plug

MDCAT-A with life monitor function indicates the life of the product when the check button on the front is pressed.

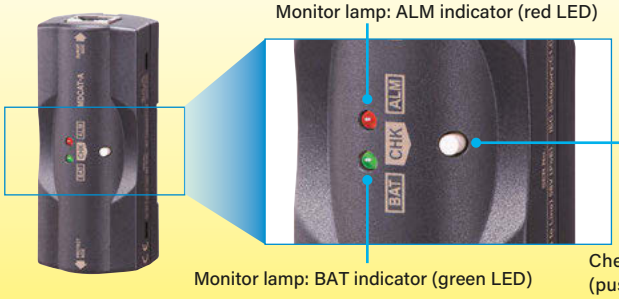

Check the status of the lightning surge protector with the monitor lamp lighting indication (see table below).

- The product is determined to have reached its end of life when the discharge count of the discharge element reaches the virtual end-of-life count.

BAT	ALM	BATTERY	DISCHARGE ELEMENT	REPLACEMENT
☼	○	Normal		No Need
☼	☼	Normal	Near End	Near
○	☼	Normal	End of Life	Immediately Required
○	○	Discharged	Unable to Judge	Immediately Required

☼: ON
○ : OFF

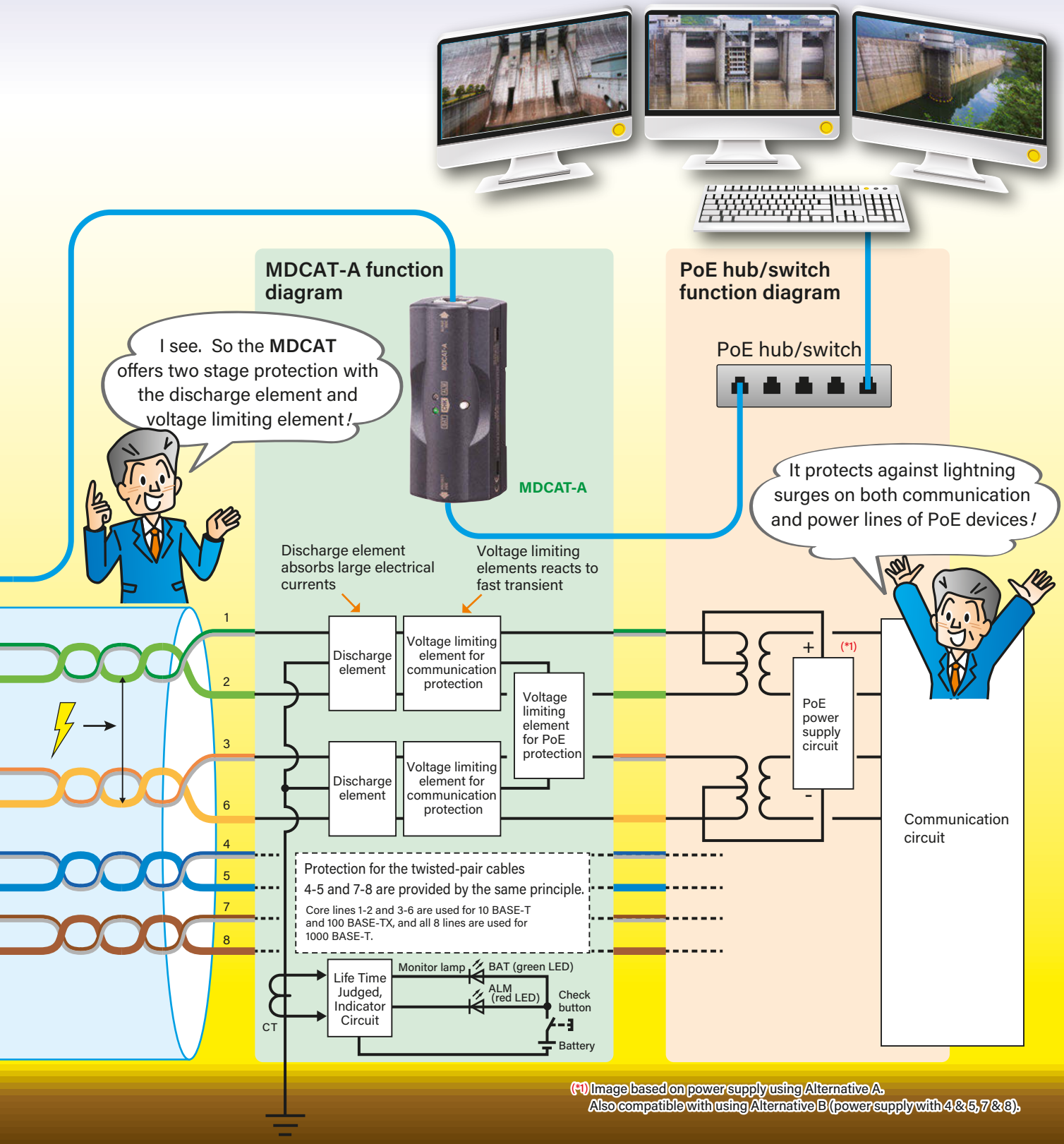

(*1) Image based on power supply using Alternative A.
Also compatible with using Alternative B (power supply with 4 & 5, 7 & 8).

Recent surveillance camera technology capable of higher-resolution image quality has made such devices an integral component of social support systems for providing safety and security, such as those used in disaster mitigation and anti-terrorism. Protecting expensive camera systems from lightning surges is not only important from a security standpoint but also to protect system cost.
On the other hand, as camera monitoring systems increase in size, the longer cables required for communications and power supply lines provide more and more opportunity for lightning surges to infiltrate the system. Lightning surge voltages are an issue for both between individual lines (normal mode) and between the line and ground (common mode), with both pathways requiring ways to mitigate over-voltage to protect system devices. And in the case of camera monitoring systems that typically get a power feed over a PoE (Power over Ethernet) line, it is also important the PoE line be covered by some form of surge protection. M-Rester lightning surge protectors specifically designed to electrical components are installed in a system along the route of lightning surge infiltration to absorb surges from multiple sources, and completely eliminate most risk from lightning surges.

Example of MDCAT System Set Up

MDCAT has passed communication tests using cables up to 100 meters in length for CAT5e and for CAT6 (for **MDCAT-A-6, MDCAT-6**). Even with an **MDCAT** lightning surge protector installed, the system offers limited interference on communications allowing users to fully leverage the performance of 1000BASE-T compliant Ethernet devices. As indicated in the following diagrams, **MDCAT** can be used for small scale systems where surveillance cameras are connected in a star configuration to a hub in a central monitoring room, or in mid-scale systems connected in a cascading configuration to hubs located in individual surveillance camera cabinets. Lightning surges don't always enter a system from the communication lines, but can also enter over the power line, which surge protectors dedicated for power lines are also be used for.

Small scale system: star configuration

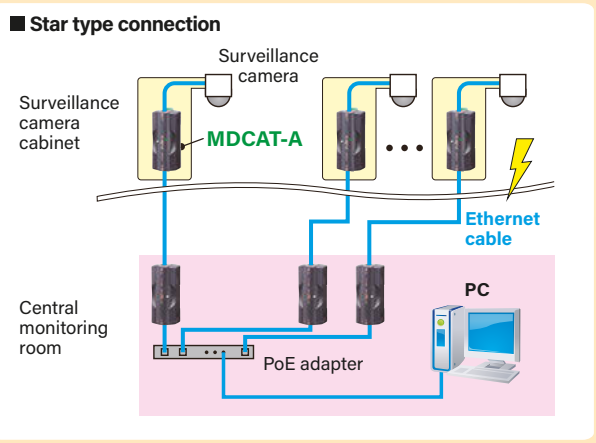

Mid-scale system: cascade configuration

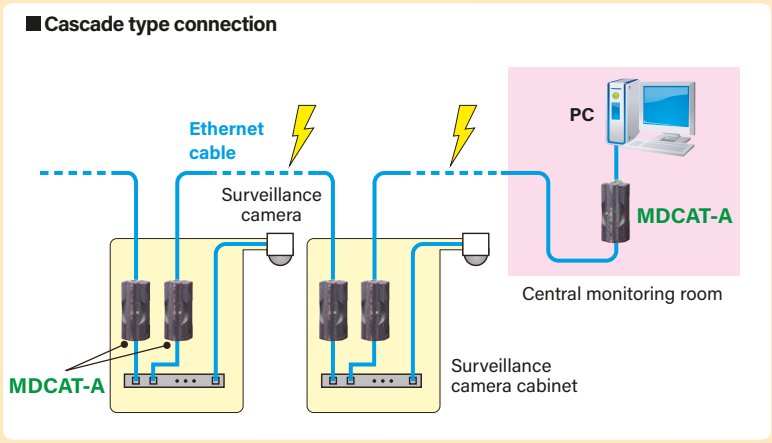

Large scale systems where private security companies observe customer sites over the internet

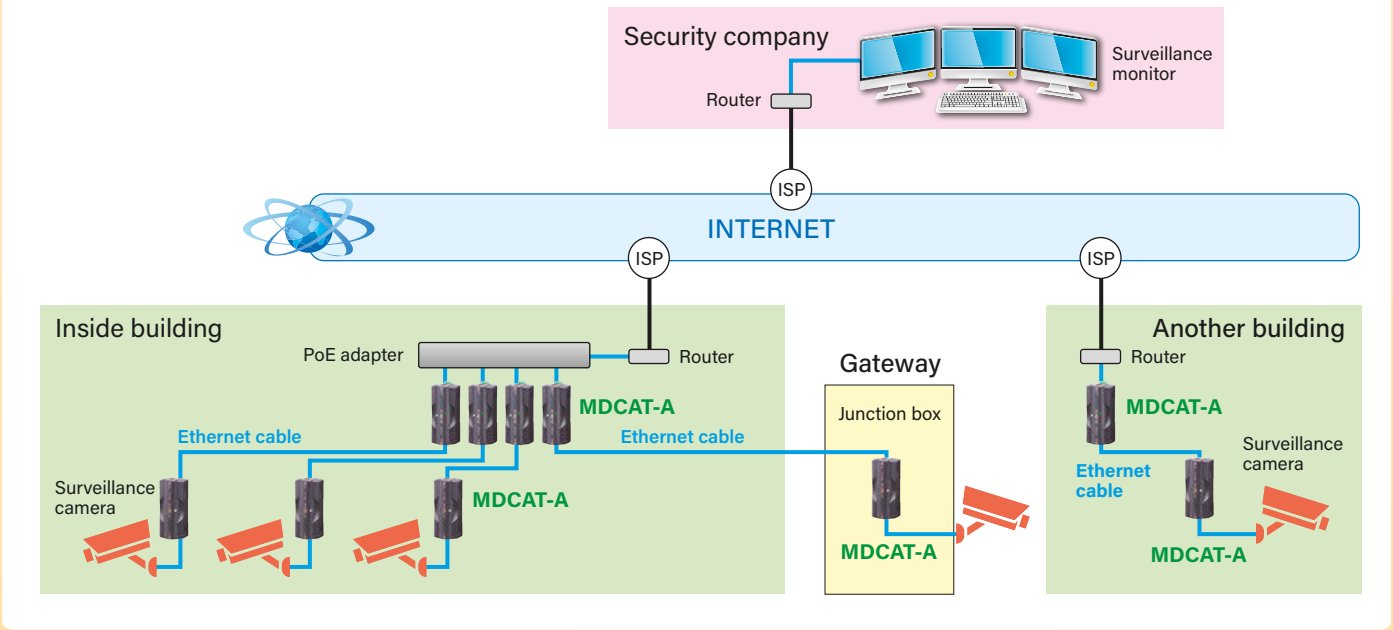

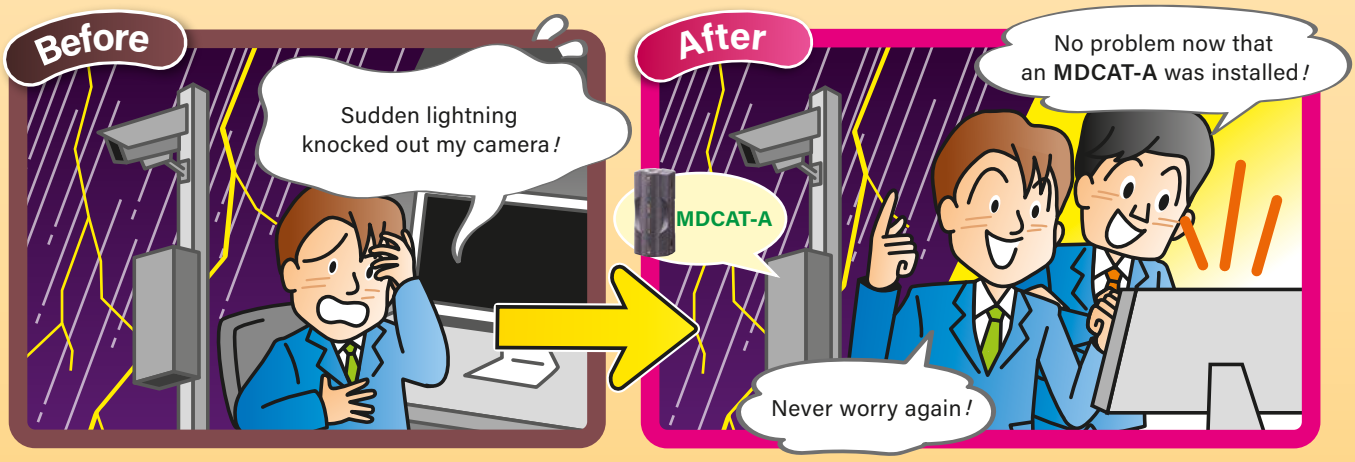

Surveillance Cameras and

Transformer substation



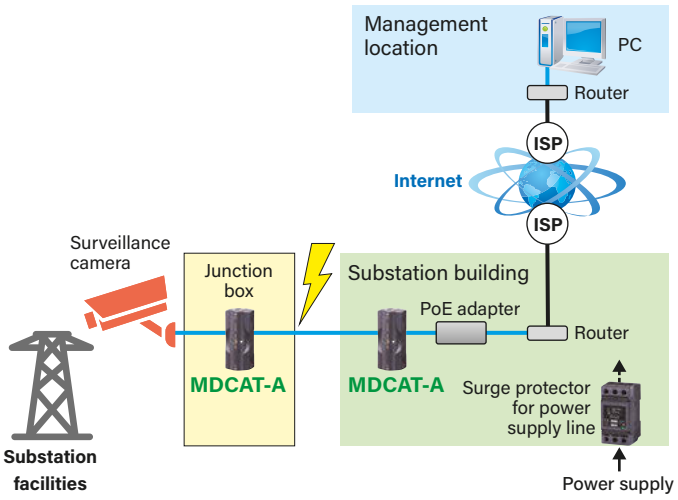

Mega solar power plant



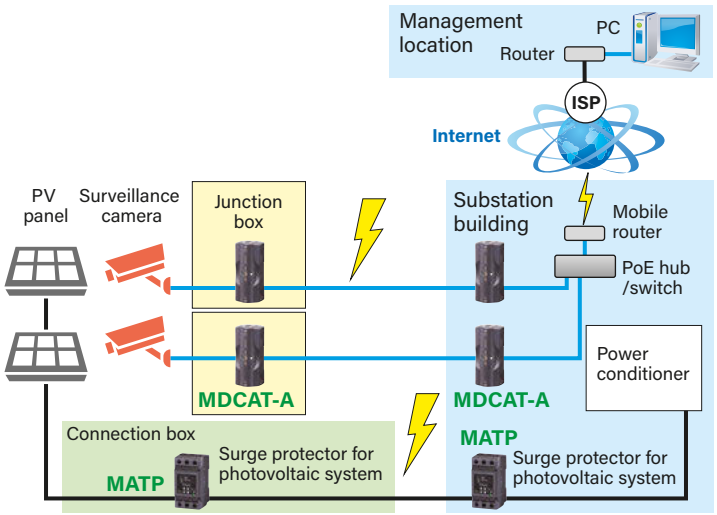

Poultry farm



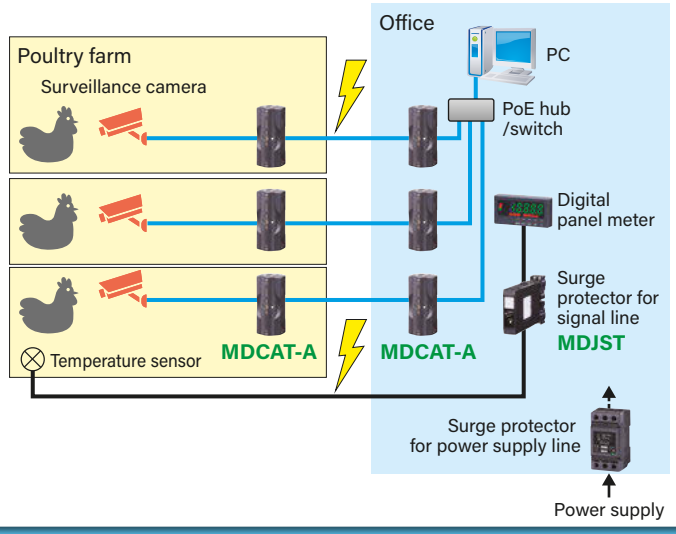

Cultural assets



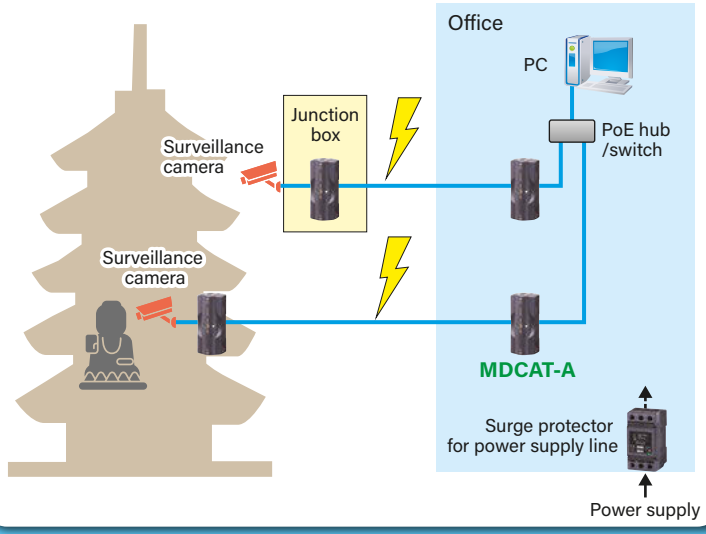

Other Ethernet Applications

Hospital



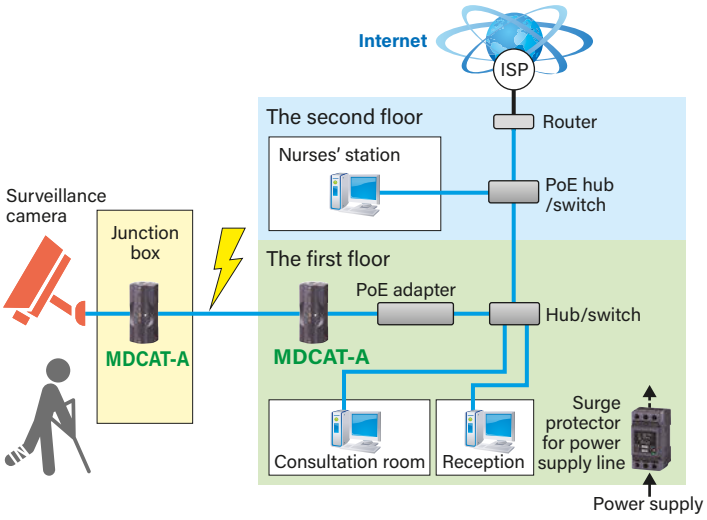

Electrical vehicle charging station



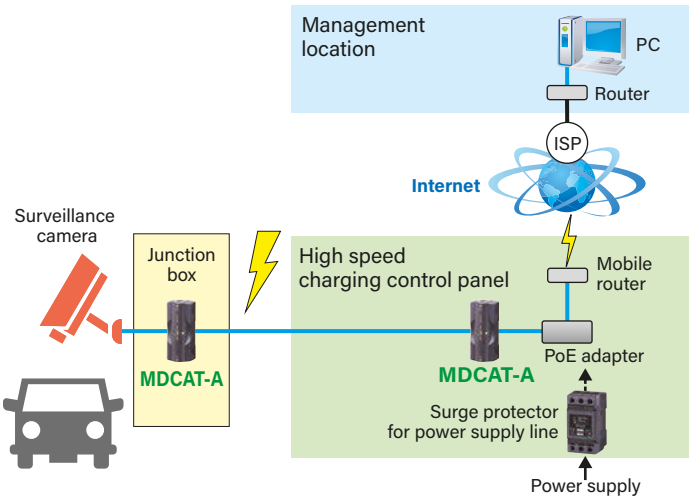

Factory



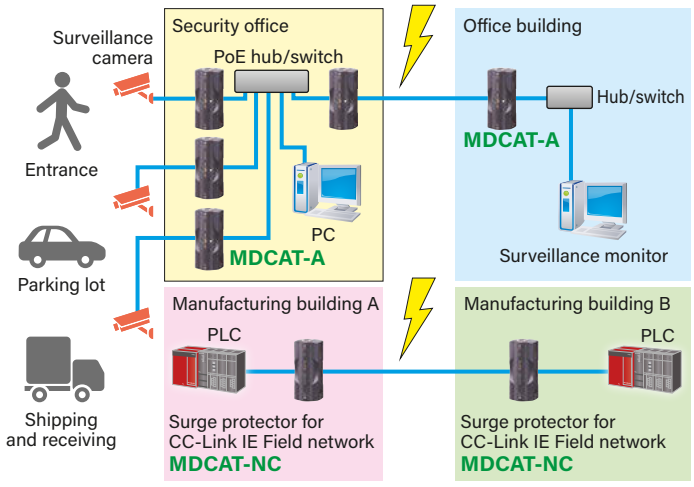

Surge protectors for power supply line are required in each building.

Data center



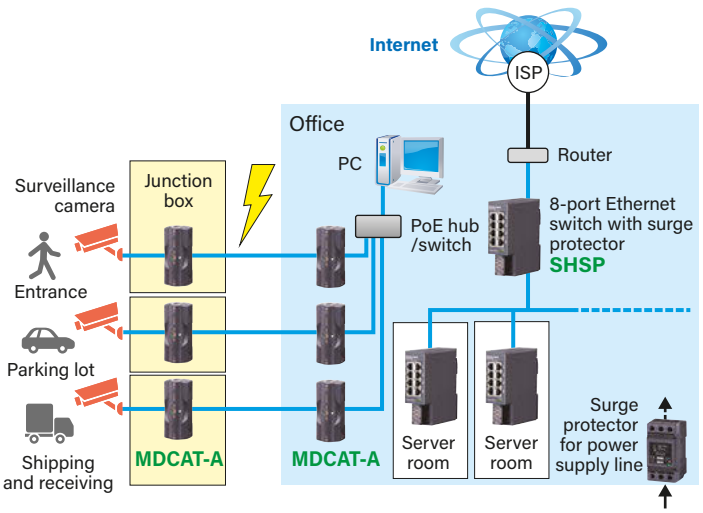

Terminology Definitions

Categories of lightning surge protectors

In IEC standards (IEC 61643-21), lightning surge protectors are categorized into categories A1 through D2 (Table 1) according to the expected level of lightning surge. Each category has designated testing procedures, so individual models of surge protectors can be used across several categories by complying with the corresponding testing requirements of each category. Categories A1 and A2 are based on rather slow lightning surges like commercial cycle frequencies. Categories B1, B2 and B3 are based on frequent attacks by relatively weak lightning surges around 10 A. Generally, induced lightning surges register current waveforms around 8/20 µs, versus 10/350 µs for direct lightning strikes. Categories C1 and C2 are based on induced lightning strikes, and Category D1 is based on direct lightning strikes. In the case of communications equipment like surveillance cameras, it is mostly induced lightning strikes that enter a system across communication lines that pose a risk. The **MDCAT** is a category C1 and C2 surge protector designed to mitigate induced lightning strikes.

Table 1 Categories of lightning surge protectors for communication and signal lines

	Category	Type of test	Short-circuit current
Based on induced lightning	A1	Very slow rate of rise	10 A
	A2	AC (48 Hz – 62 Hz)	0.1 A - 20 A
	B1	Slow rate of rise	100 A
	B2		25 A - 100 A
	B3		10 A - 100 A
	C1	Fast rate of rise	0.25 kA - under 1 kA
	C2		1 kA - 5 kA
	C3		10 A - 100 A
Based on direct lightning	D1	High energy	0.5 kA - 2.5 kA
	D2		0.6 kA - 2.0 kA

PoE

PoE (Power Over Ethernet) functionality refers to technology that provides a power supply superimposed over the communication lines like LAN cables used for sending data signals. Using PoE functionality requires the electrical device being powered, like the surveillance camera, to be PoE compliant, as well as using PoE compliant power supply switching hubs and PoE adapters. Depending on the size of the load consumption being supplied, options are available for PoE and PoE Plus which are both standardized by IEEE (Table 2) Using PoE avoids the need for installing power supply wiring or using AC adapters. PoE occurs in two power supply methods, Alternative A or Alternative B depending on the method in which the power supply line is integrated into the Ethernet line. **MDCAT** is compliant with both methods.

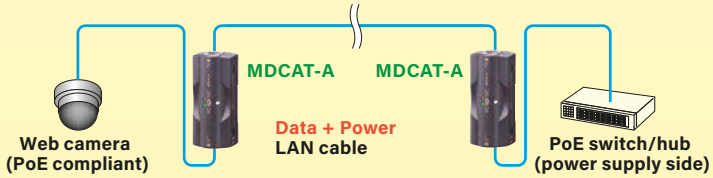

Table 2 PoE / PoE Plus specifications

	PoE	PoE Plus
Standard	IEEE 802.3af	IEEE 802.3at
Current	Maximum 0.35 A	Maximum 0.60 A
Maximum power consumption	15.4 W	30 W
Compliant cable	Category 5e and higher(*2)	Category 5e and higher

(*2) Standards call for Category 3 and higher, but some commercially available Category 3 cables are not compliant.

Cable Categories CAT5e and CAT6, etc

Category 5e (CAT5e) and Category 6 (CAT6) refer to ANSI/TIA/EIA-568 standards for twisted-pair cables (stranded cable). The standards cover not only LAN cables, but also include RJ-45 connectors and modular jacks. Ever faster Ethernet connection speeds have heightened performance demands on LAN cables. Cables now come in CAT3, CAT5, CAT5e, CAT6 versions, with higher numbers indicating higher cable performance. Currently, typical Ethernet connection speeds are at around 100 Mbps for 100BASE-TX or 1 Gbps for 1000BASE-T, which require either CAT5e or CAT6 type cables (Table 3). **MDCAT** can be used for both cable categories CAT5e and CAT6.

Image 1

Cross section of each cable category

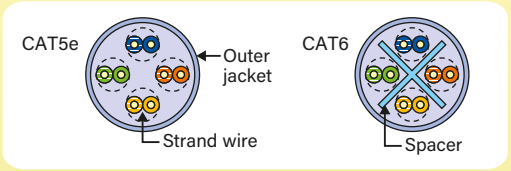

Table 3

IEEE802.3 and category compliance

Connection speed / Category	10 BASE-T IEEE 802.3 i	100 BASE-TX IEEE 802.3 Xu	1000 BASE-T IEEE 802.3 ab
	10 Mbps	100 Mbps	1 Gbps
CAT 3	Y	---	---
CAT 4	Y	---	---
CAT 5	Y	Y	(*3)
CAT 5 e	Y	Y	Y
CAT 6	Y	Y	Y

MDCAT compliant categories

(*3) Some commercially available cables non-compliant



Grounding is a key element of lightning surge protectors!

By using a steel or copper DIN rail, **MDCAT** can be installed in a highly compact configuration because they allow a ground connection without using a designated ground wire. However, it is recommended a ground connection be made with a cable and ground terminal when the **MDCAT** is used with an aluminum rail, due to an oxidization layer causing potential interference between the **MDCAT** and ground connection. A cable and ground terminal connection is also recommended if the DIN rail is not used.

Shortcircuit bar and DIN rail installation

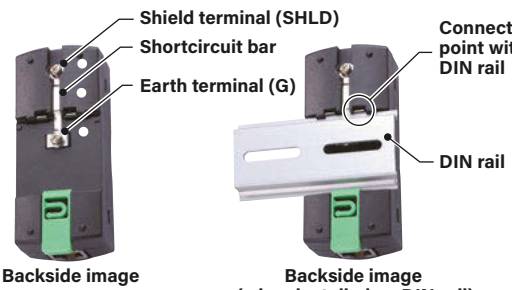

DIN rail: TH35-7.5, 1 mm thick type

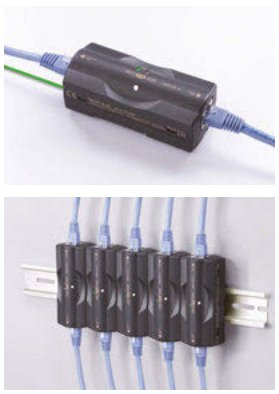

A comprehensive lineup of lightning surge protectors for safeguarding your transmission networks

A Half-Century History of Lightning Surge Protection Devices Designed Specifically for Electronic Equipment

Half a century has passed since our company first started delivering lightning surge protectors for standard instrumentation signals. Since then our lineup of surge protectors has evolved to make the most of our expertise in remote measurement and control systems that use our company's products like signal conditioners, telemetering equipment and remote I/O devices, and even better defend important network devices. Our lightning surge protectors comply with the relevant network standards.

Network	Ethernet			Single Pair Ethernet		CC-Link	CC-Link IE Field
	Conforms with PoE and PoE Plus, Life monitor	Conforms with PoE and PoE Plus		Conforms with PoDL, Life monitor	Conforms with PoDL		
							
Model	MDCAT-A	MDCAT	MDM5E-A	MDCAT-SPE-A	MDCAT-SPE	MDW5-CC	MDCAT-NC

Network	RS-485/422				DeviceNet	PROFIBUS-PA		FOUNDATION Fieldbus
	Ultra-slim	Plug-in type	Life monitor, Plug-in type	Full-duplex		Ultra-slim	Plug-in type	Ultra-slim
								
Model	MD74R	MDP-4R	MDW2A-4R	MDW5-4R	MD-DNM MD-DNS	MD7PA	MDP-PA	MD7FB

Please contact us regarding surge protectors for power lines and signal lines.

8-port Ethernet switch with surge protector

Ethernet switching hub with lightning surge protection

Model	POWER INPUT
SHSP	100-240V AC
	24V DC

CE marking for 24V DC power supply type



The M-RESTER lightning surge protector is specifically designed and developed for lightning protection on electrical components. Please refer to our website for further details on lightning surge conditions, and techniques for protecting electrical components against lightning surges.

MDCAT EXTERNAL DIMENSIONS unit: mm (inch)

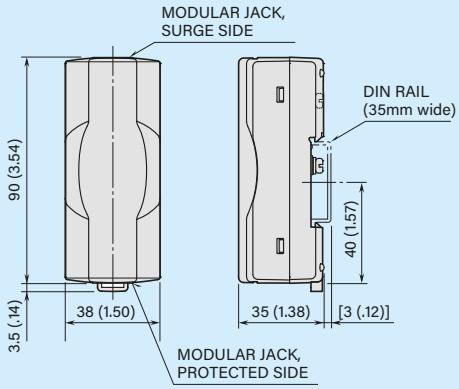

Website

Request Info

MG CO., LTD.
Make Greener automation

Your local representative: