INSTRUCTION MANUAL

REMOTE CONTROL RELAY CONTROL MODULE, 8 points (LonWorks)

MODEL **R7L-RR8**

BEFORE USE ....

Thank you for choosing us. Before use, please check contents of the package you received as outlined below.
If you have any problems or questions with the product, please contact our sales office or representatives.

■ PACKAGE INCLUDES:

Remote control relay control module .....(1)
NeuronID label.....(2)

■ MODEL NO.

Confirm that the model number described on the product is exactly what you ordered.

■ INSTRUCTION MANUAL

This manual describes necessary points of caution when you use this product, including installation, connection and basic maintenance procedures.
LNS Plug-in Software (model: R7LPLG) is usable to set up Functional Blocks. For detailed information, refer to the R7PLG Users Manual. The R7LPLG is downloadable at our web site.

POINTS OF CAUTION

■ POWER INPUT RATING & OPERATIONAL RANGE

- Locate the power input rating marked on the product and confirm its operational range as indicated below:
  24V AC rating: 24V ±10%, 50/60 Hz, approx. 75mA
  24V DC rating: 24V ±10%, approx. 50mA

■ GENERAL PRECAUTIONS

- Before you remove the unit or mount it, turn off the power supply and output signal for safety.
- Before you remove the terminal block or mount it, make sure to turn off the power supply and input signal for safety.

■ ENVIRONMENT

- Indoor use.
- When heavy dust or metal particles are present in the air, install the unit inside proper housing with sufficient ventilation.
- Do not install the unit where it is subjected to continuous vibration. Do not subject the unit to physical impact.
- Environmental temperature must be within -10 to +55°C (14 to 131°F) with relative humidity within 30 to 90% RH in order to ensure adequate life span and operation.

■ WIRING

- Do not install cables close to noise sources (relay drive cable, high frequency line, etc.).
- Do not bind these cables together with those in which noises are present. Do not install them in the same duct.
- Be sure to close the terminal cover for safety.

■ RESTRICTIONS WHEN USING LonMaker3.0 or 3.1

- Operating Environment
  Please use LonMaker3.0 under the Environment of LNS3 Service Pack 8 and use LonMaker3.1 under the Environment of LonMaker3.1 Service Pack 3 or later.
  Please use resource files of LonMark Resource File Ver12 or later.
- LNS Plug-in Software is not usable.
- The network variable of nvoCNTOut (fbCNT) is only SNVT_count_f.
- When registering a Device on LonMaker, please don't use the following items.
  External Interface Definition / Upload From Device
  Specify Device Channel / Auto-Detect

■ AND ....

- The unit is designed to function as soon as power is supplied, however, a warm up for 10 minutes is required for satisfying complete performance described in the data sheet.

MG CO., LTD. www.mgco.jp
5-2-55 Minamitsumori, Nishinari-ku, Osaka 557-0063 JAPAN

COMPONENT IDENTIFICATION

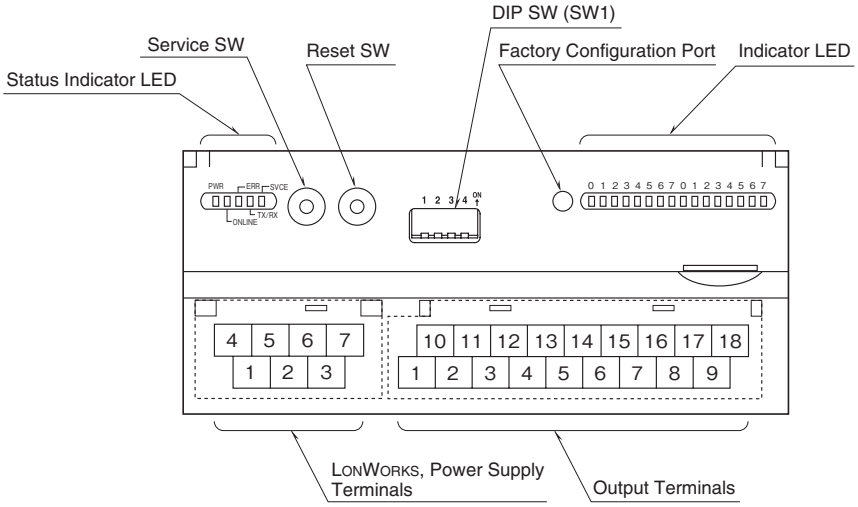

■ STATUS INDICATOR LED

ID	COLOR	STATE	MEANING
PWR	Green	ON	Internal 5V is normal
		OFF	Internal 5V is abnormal.
ONLINE	Green	ON	Online
		Blink approx. 0.5 Hz	Offline Sending/receiving of Network Variables has stopped.
		Blink approx. 2 Hz	Receiving Wink Message
		OFF	Abnormal state
ERR	Red	ON	Writing in the non-volatile memory
		Blink	Abnormal state
		OFF	Normal state
TX/RX	Green	ON	Sending/receiving Network Variables
		OFF	Communication is lost.
SVCE	Green	ON	No network information
		Blink approx. 0.5 Hz	Offline Sending/receiving of Network Variables has stopped.
		OFF	Normal state

■ I/O STATUS INDICATOR LED

Output and feedback input status are indicated with LED.

ON : LED ON
OFF : LED OFF

■ SERVICE SWITCH

Used to identify the node in LonWorks network configuration.

■ RESET SWITCH

Used to reset the Neuron Chip. Press the switch behind the front cover to reset.
Control functions are halted while completing resetting and restarting. Confirm no danger before conducting resetting.

■ POWER SUPPLY, LonWorks TERMINAL ASSIGNMENT

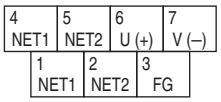

NO.	ID	FUNCTION, NOTES
1	NET1	LonWorks communication 1
2	NET2	LonWorks communication 2
3	FG	FG
4	NET1	LonWorks communication 1
5	NET2	LonWorks communication 2
6	U (+)	Power input
7	V (–)	Power input

Note: LonWorks wiring must be paired between NET1 terminals and/or NET2 terminals.

■ OUTPUT TERMINAL ASSIGNMENT

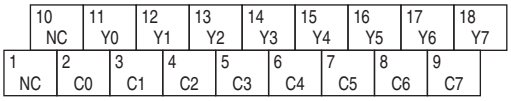

NO.	ID	FUNCTION	NO.	ID	FUNCTION
1	NC	No connection	10	NC	No connection
2	C0	Common	11	Y0	Output 0
3	C1	Common	12	Y1	Output 1
4	C2	Common	13	Y2	Output 2
5	C3	Common	14	Y3	Output 3
6	C4	Common	15	Y4	Output 4
7	C5	Common	16	Y5	Output 5
8	C6	Common	17	Y6	Output 6
9	C7	Common	18	Y7	Output 7

■ OPERATING MODE SETTING

• Extension (SW1-1, 1-2)

SW1-1	SW1-2	Extension
OFF	OFF	No extension (*)
ON	OFF	Discrete input 8 or 16 points
OFF	ON	Discrete output 8 or 16 points

(*) Factory setting
Note: Be sure to set unused SW 1-3 and 1-4 to OFF
Note that the switch settings take precedence over the network parameter settings.

TERMINAL CONNECTIONS

Connect the unit as in the diagram below.

■ EXTERNAL DIMENSIONS unit: mm (inch)

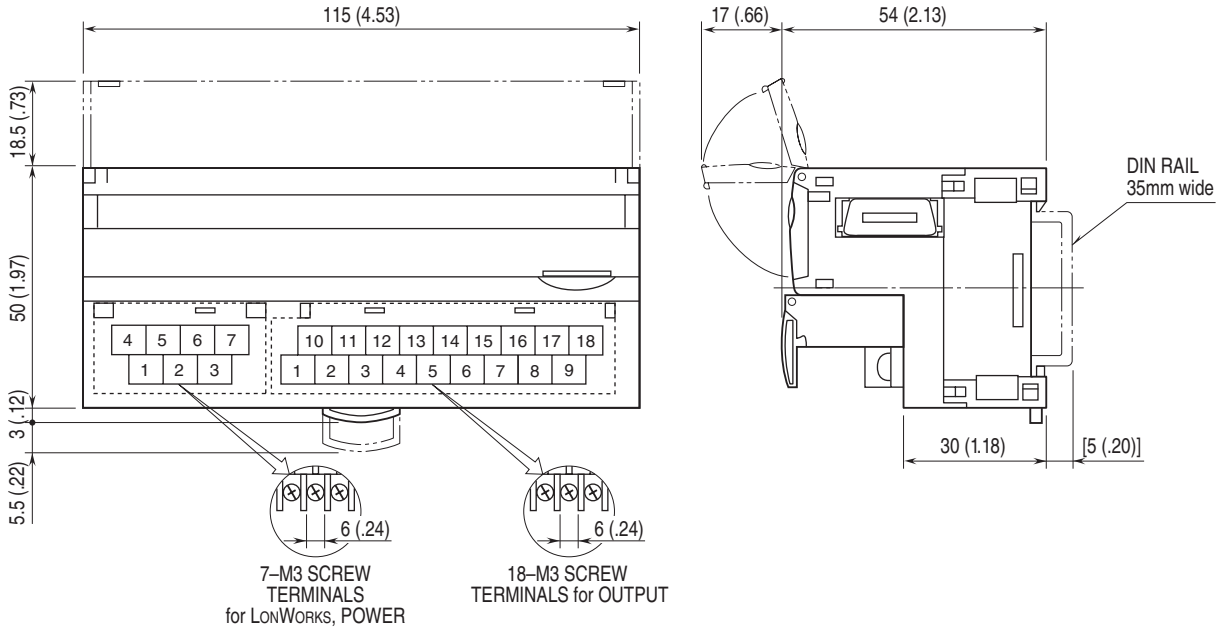

■ CONNECTION DIAGRAM

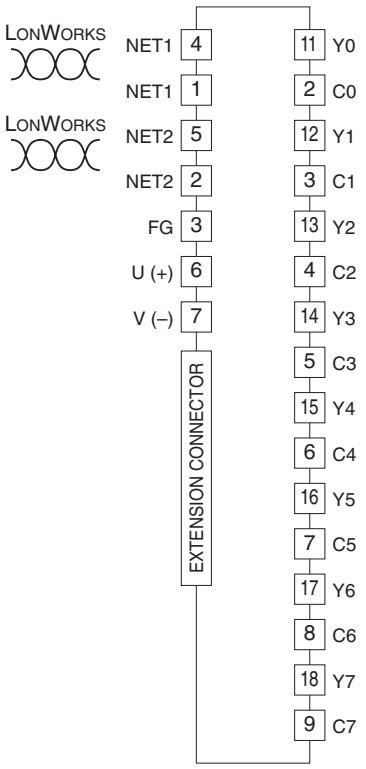

■ Output Connection Example

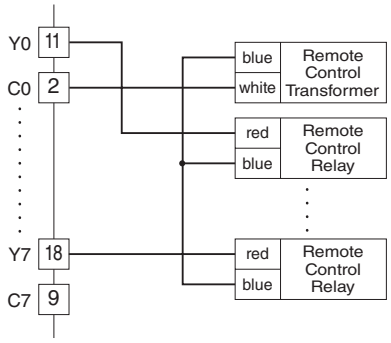

COMMUNICATION CABLE CONNECTIONS

■ HOST PC CONNECTION

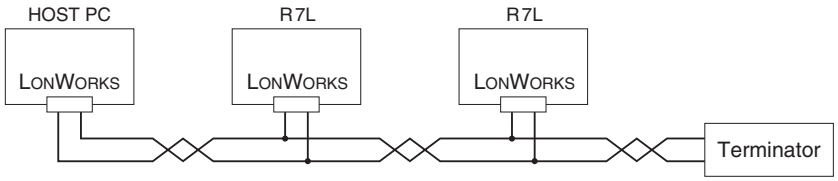

WIRING INSTRUCTIONS

■ SCREW TERMINAL

Torque: 0.5 N·m

■ SOLDERLESS TERMINAL

Refer to the drawing below for recommended ring tongue terminal size. Spade tongue type is also applicable.
Applicable wire size: 0.25 to 1.65 mm^2 (AWG 22 to 16)
Recommended manufacturer: Japan Solderless Terminal MFG. Co., Ltd, Nichifu Co., Ltd

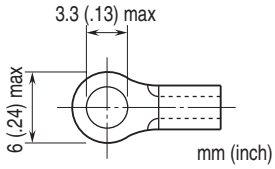

DEVICE INTERFACE FILE

Device Interface File (XIF) is used to define a LonWorks device when programmed on LonMaker.
For this module, the following file is used:

R7L-RR8v113.XIF

The XIF files are downloadable at our web site.
Note: In case that the Default value of Configuration Property is set in commission, be sure to set the Default value also in NvType.

FUNCTIONAL BLOCKS

■ NodeObject

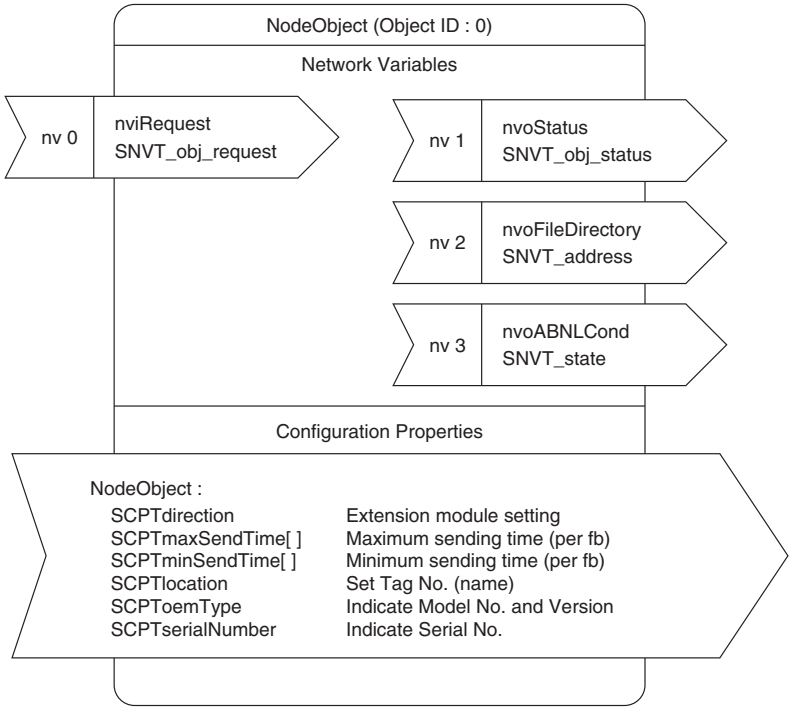

• Network Variables

NETWORK VARIABLE	TYPE { Range } { Default }	EXPLANATIONS
nviRequest	{SNVT_obj_request}	For use with LonMaker and other tools.
nvoStatus	{SNVT_obj_status}	For use with LonMaker and other tools.
nvoFileDirectory	{SNVT_address}	For use with LonMaker and other tools. Required to get access to Configuration Properties.
nvoABNLCond	{SNVT_state}	Shows the device status (All 0s in normal conditions). Bit 0 through Bit 9 : Invalid Bit 10 : E^2PROM Configuration Property check sum error Bit 11 : E^2PROM Count data check sum error (Bit 10 and Bit 11 can be reset to 0 by RQ_CLEAR_STATUS against NodeObject.) Bit 12 through Bit 15 : Invalid

• Configuration Properties

CONFIGURATION PROPERTY	NETWORK VARIABLE	TYPE { Range } { Default }	EXPLANATIONS
SCPTdirection	----	{SNVT_state} {0 or 1} {0,0,0,0,0,0,0,0, 0,0,0,0,0,0,0,0}	Bit 0, Bit 1: Setting the extension module (Power supply must be reset when this configuration property is changed.) 0,0 : Without extension module 1,0 : Discrete input (fb and other settings assigned to the 9th and following points are invalid with 8-point input module.) 0,1 : Discrete output (fb and other settings assigned to the 9th and following points are invalid with 8-point output module.) Set this property before an extension module is connected. Bit 2 through Bit 15 : Invalid
SCPTmaxSendTime [Number of fb]	----	{SNVT_time_sec} {0.0,10.0...3600.0} {0.0}	Maximum time interval to send network variables (per fb). (Power supply must be reset when this configuration property is changed.) Network variables are sent out in the specified intervals even when there is no change in the value. No sending when a value less than 10.0 is set. Invalid property when the assigned fb has no network variables to be sent to the network.
SCPTminSendTime [Number of fb]	----	{SNVT_time_sec} {0.0,0.2...3600.0} {1.0}	Minimum time interval to send network variables (per fb). (Power supply must be reset when this configuration property is changed.) Network variables are sent out in the specified intervals even when there are changes in the value faster than the interval. No sending when a value less than 0.2 is set. Invalid property when the assigned fb has no network variables to be sent to the network.
SCPTlocation	----	{SNVT_str_asc} {30-character string} {“”}	Used to write Tag No. (name)
SCPToemType	----	{SNVT_str_asc} {e.g. “R7L-RR8_VER:0.10”}	Used to indicate Model No. and Version
SCPTserialNumber	----	{SNVT_str_asc} {e.g. “ZZ123456”}	Used to indicate Serial No.

■ FUNCTIONAL BLOCK: fbCNT[0...7]

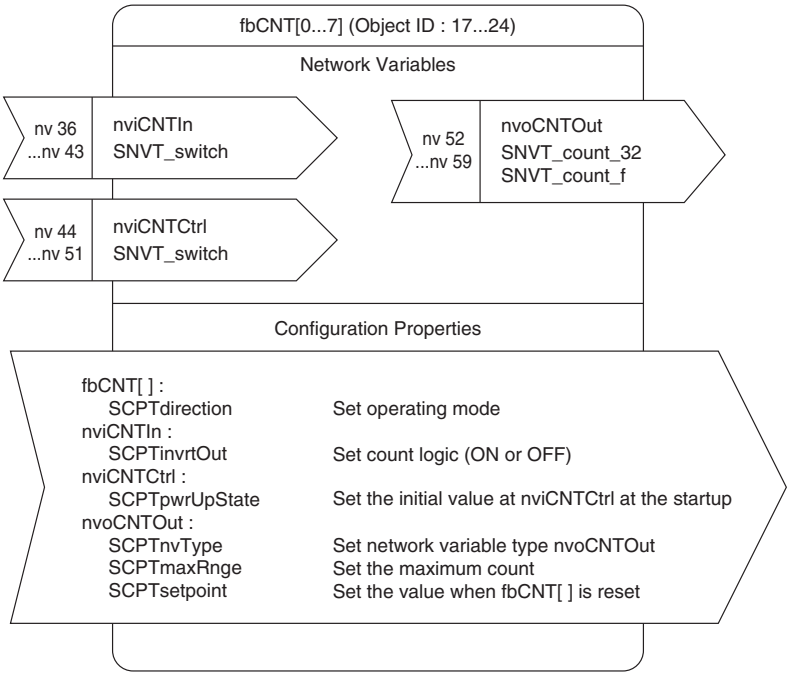

• Network Variables

NETWORK VARIABLE	TYPE { Range } { Default }	EXPLANATIONS
nviCNTIn	{SNVT_switch} {0.0 0}, {100.0 1}, {Invalid} {0.0 -1}	Counted object
nviCNTCtrl	{SNVT_switch} {0.0 0}, {100.0 1}, {Invalid} {100.0 1}	Controls operation of fbCNT 0.0 0 : Stop counting 100.0 1 : Start counting Invalid : Reset count value
nvoCNTOut	{SNVT_count_32} {0...999 999 999} {0} {SNVT_count_f} {0...999 999} {0}	Number of ON counts or accumulated time of ON status at nviCNTIn or the input terminal

• Configuration Properties

CONFIGURATION PROPERTY	NETWORK VARIABLE	TYPE { Range } { Default }	EXPLANATIONS
SCPTdirection	----	{SNVT_state} {0 or 1} {0,0,0,0,0,0,0,0, 0,0,0,0,0,0,0,0}	Bit 0 through 4: Counted object 0,0,0,0,0 : nviCNTIn 1,0,0,0,0 : ExX0 0,1,0,0,0 : ExX1 1,1,0,0,0 : ExX2 0,0,1,0,0 : ExX3 1,0,1,0,0 : ExX4 0,1,1,0,0 : ExX5 1,1,1,0,0 : ExX6 0,0,0,1,0 : ExX7 1,0,0,1,0 : ExX8 0,1,0,1,0 : ExX9 1,1,0,1,0 : ExXA 0,0,1,1,0 : ExXB 1,0,1,1,0 : ExXC 0,1,1,1,0 : ExXD 1,1,1,1,0 : ExXE 0,0,0,0,1 : ExXF ExX0 through ExXF: Extension discrete input Bit 6: Count function 0 : Number of status changes from OFF to ON 1 : Accumulated time of ON status Bit 7: Memory storage at the non-volatile memory 0 : Count retained in the memory and preset at the startup 1 : Count always reset to 0 Bit 5, 8 through 15 : Invalid Minimum input pulse width 500 ms for nviCNTIn, 50 ms for the input terminals. DO NOT connect a network variable to nviCNTIn when one of the input terminals (other than nviCNTIn) is assigned as the counted object. ON time per 1 second increments.
SCPTinvrtOut	nviCNTIn	{SNVT_lev_disc} {ST_OFF, ST_ON} {ST_OFF}	Count logic at nviCNTIn. ST_OFF : Count with nvoCNTIn = ON ST_ON : Count with nvoCNTIn = OFF
SCPTpwrUpState	nviCNTCtrl	{SNVT_switch} {0.0 0}, {100.0 1}, {Invalid} {100.0 1}	Set value applied at nviCNTCtrl when the power supply is turned on. 0.0 0 : Stop counting 100.0 1 : Start counting Invalid : Reset count value
SCPTnvType	nvoCNTOut	{SNVT_nv_type} {SNVT_count_f, SNVT_count_32} {SNVT_count_f}	Indicates nvoCNTOut type. For use with LonMaker and other tools.
SCPTmaxRnge	nvoCNTOut	Same as nvoCNTOut. Default = Max. range value available for the type	Maximum count for nvoCNTOut. Count reset to 0 and restarted at overflow. It is possible to set from 100 up to the maximum of the count value.
SCPTsetpoint	nvoCNTOut	Same as nvoCNTOut.	Set value applied at nvoCNTOut when fbCNT[ ] is Over-Ride.

■ FUNCTIONAL BLOCK: fbCMP[0...7]

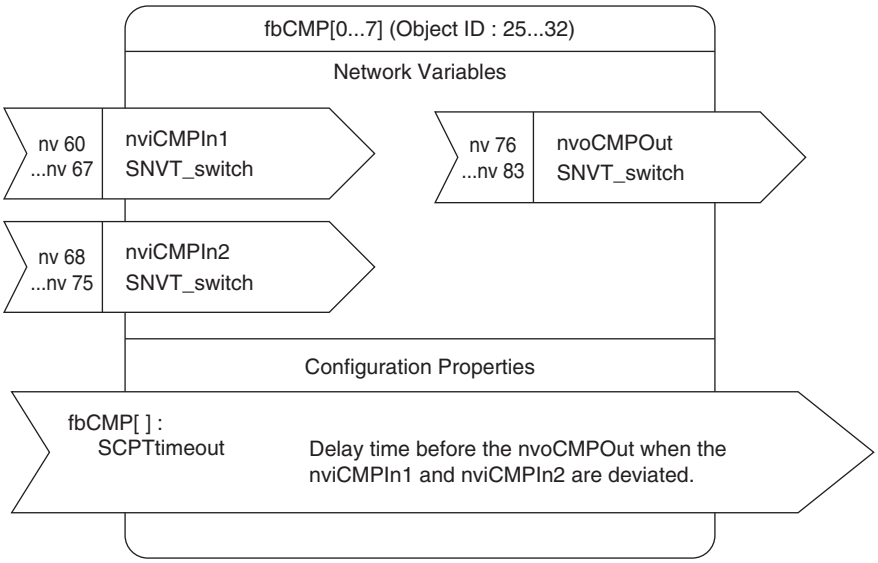

• Network Variables

NETWORK VARIABLE	TYPE { Range } { Default }	EXPLANATIONS
nviCMPIn1	{SNVT_switch} {0.0 0}, {100.0 1}, {Invalid} {0.0 -1}	Connects to the network variable to be compared.
nviCMPIn2	{SNVT_switch} {0.0 0}, {100.0 1}, {Invalid} {0.0 -1}	Connects to the network variable to be compared.
nvoCMPOut	{SNVT_switch} {0.0 0}, {100.0 1}, {Invalid} {0.0 0}	nviCMPIn1 and nviCMPIn2 are compared. OFF is output when both values are equivalent, ON or 'Invalid' is output when they are not. ON is output when nviCMPIn1 status change caused the discrepancy. 'Invalid' is output when nviCMPIn2 status change caused it. OFF is output when nviCMPIn1 and/or nviCMPIn2 is 'Invalid,' regardless of the values of both.

• Configuration Properties

CONFIGURATION PROPERTY	NETWORK VARIABLE	TYPE { Range } { Default }	EXPLANATIONS
SCPTtimeout	----	{SNVT_time_sec} {0.1...60.0} {5.0}	Delay time before ON or 'Invalid' is output when a discrepancy occurs between nviCMPIn1 and nviCMPIn2. OFF is immediately output when nviCMPIn1 and nviCMPIn2 states match, regardless of this setting.

■ FUNCTIONAL BLOCK: fbRR[0,1]

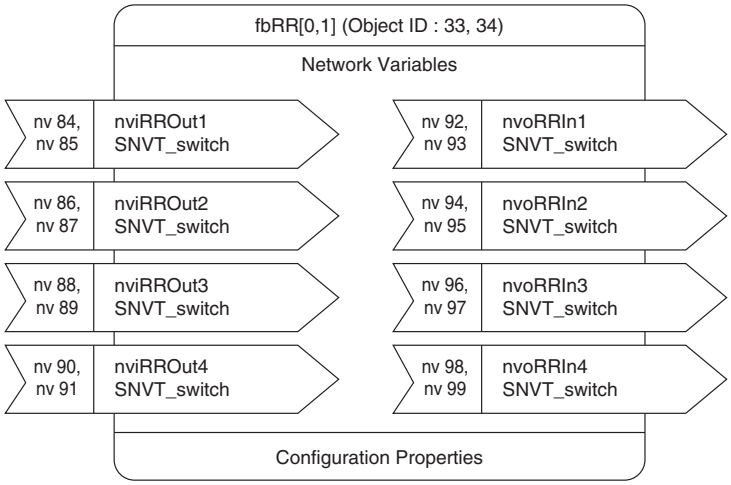

• Network Variables

NETWORK VARIABLE	TYPE { Range } { Default }	EXPLANATIONS
nviRROut1	{SNVT_switch} {0.0 0}, {100.0 1}, {Invalid} {0.0 0}	Outputs ON or OFF signal of Output 0 or Output 4 depending upon this input.
nviRROut2	{SNVT_switch} {0.0 0}, {100.0 1}, {Invalid} {0.0 0}	Outputs ON or OFF signal of Output 1 or Output 5 depending upon this input.
nviRROut3	{SNVT_switch} {0.0 0}, {100.0 1}, {Invalid} {0.0 0}	Outputs ON or OFF signal of Output 2 or Output 6 depending upon this input.
nviRROut4	{SNVT_switch} {0.0 0}, {100.0 1}, {Invalid} {0.0 0}	Outputs ON or OFF signal of Output 3 or Output 7 depending upon this input.
nvoRRIn1	{SNVT_switch} {0.0 0}, {100.0 1}, {Invalid} {0.0 0}	Outputs Input 0 or Input 4 status signal.
nvoRRIn2	{SNVT_switch} {0.0 0}, {100.0 1}, {Invalid} {0.0 0}	Outputs Input 1 or Input 5 status signal.
nvoRRIn3	{SNVT_switch} {0.0 0}, {100.0 1}, {Invalid} {0.0 0}	Outputs Input 2 or Input 6 status signal.
nvoRRIn4	{SNVT_switch} {0.0 0}, {100.0 1}, {Invalid} {0.0 0}	Outputs Input 3 or Input 7 status signal.

MG CO., LTD. www.mgco.jp
5-2-55 Minamitsumori, Nishinari-ku, Osaka 557-0063 JAPAN

■ FUNCTIONAL BLOCK: fbDOEX[0...7]

This Functional Block is valid only when the output extension module is specified at NodeObject.

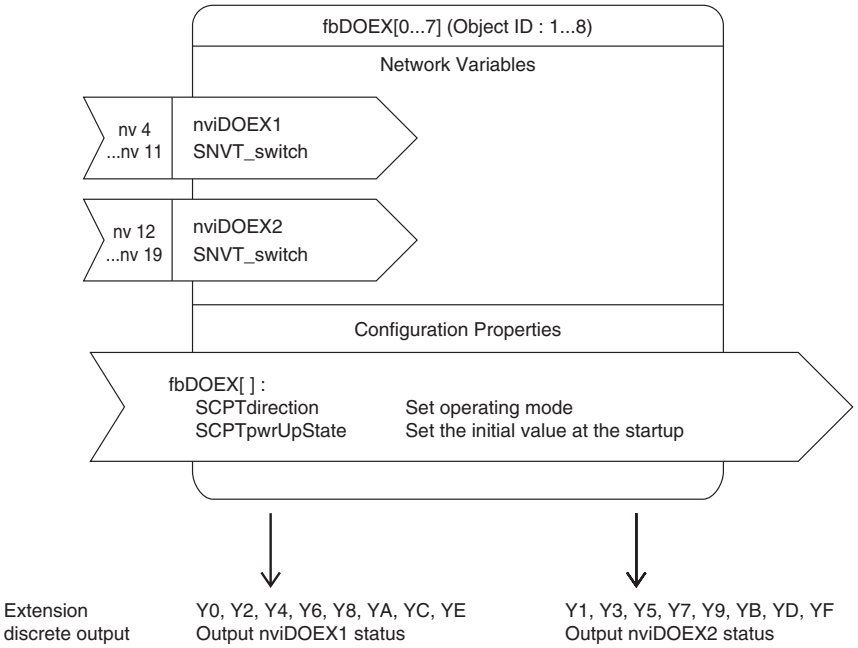

• Output Terminal v.s. fbDOEX Network Variables (nviDOEX1, nviDOEX2) Assignments

FUNCTIONAL BLOCK	NETWORK VARIABLE	OUTPUT TERMINAL
fbDOEX[0]	nviDOEX1	Y0
	nviDOEX2	Y1
fbDOEX[1]	nviDOEX1	Y2
	nviDOEX2	Y3
fbDOEX[2]	nviDOEX1	Y4
	nviDOEX2	Y5
fbDOEX[3]	nviDOEX1	Y6
	nviDOEX2	Y7
fbDOEX[4]	nviDOEX1	Y8
	nviDOEX2	Y9
fbDOEX[5]	nviDOEX1	YA
	nviDOEX2	YB
fbDOEX[6]	nviDOEX1	YC
	nviDOEX2	YD
fbDOEX[7]	nviDOEX1	YE
	nviDOEX2	YF

■ FUNCTIONAL BLOCK: fbDOEX[0...7]

• Network Properties

NETWORK VARIABLE	TYPE { Range } { Default }	EXPLANATIONS
nviDOEX1	{SNVT_switch} {0.0 0}, {100.0 1}, {Invalid} {0.0 0}	Turns on or off Y0, Y2, Y4, Y6, Y8, YA, YC, YE of the extension module depending upon this input. 100.0 1 : ON Other : OFF
nviDOEX2	{SNVT_switch} {0.0 0}, {100.0 1}, {Invalid} {0.0 0}	Turns on or off Y1, Y3, Y5, Y7, Y9, YB, YD, YF of the extension module depending upon this input. 100.0 1 : ON Other : OFF

• Configuration Properties

CONFIGURATION PROPERTY	NETWORK VARIABLE	TYPE { Range } { Default }	EXPLANATIONS
SCPTdirection	----	{SNVT_state} {0 or 1} {0,0,0,0,0,0,0,0, 0,0,0,0,0,0,0,0}	Bit 1: Output held or not at power off 0 : OFF at the power startup 1 : Outputs the held status at the power startup Bit 0, Bit 2 through 15 : Invalid
SCPTpwrUpState	nviDOEX1	{SNVT_switch} {0.0 0}, {100.0 1}, {Invalid} {0.0 0}	Set value applied at nviDOEX1 when the power supply is turned on.
SCPTpwrUpState	nviDOEX2	{SNVT_switch} {0.0 0}, {100.0 1}, {Invalid} {0.0 0}	Set value applied at nviDOEX2 when the power supply is turned on.

■ FUNCTIONAL BLOCK: fbDIEX[0...7]

This Functional Block is valid only when the input extension module is specified at NodeObject.

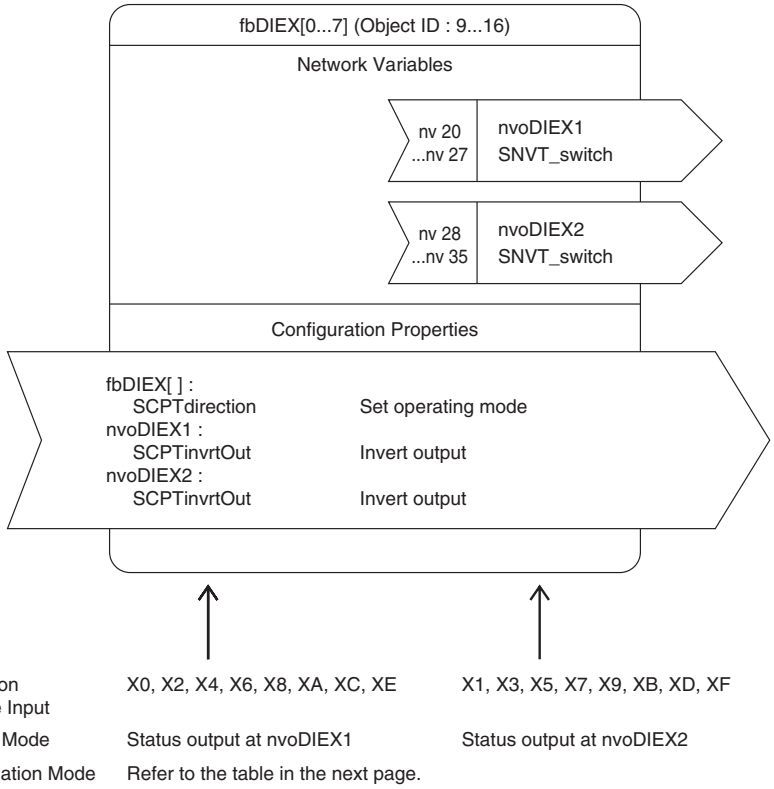

• Input Terminal v.s. fbDIEX Network Variables (nvoDIEX1, nvoDIEX2) Assignments

FUNCTIONAL BLOCK	NETWORK VARIABLE	INPUT TERMINAL
fbDIEX[0]	nvoDIEX1	X0
	nvoDIEX2	X1
fbDIEX[1]	nvoDIEX1	X2
	nvoDIEX2	X3
fbDIEX[2]	nvoDIEX1	X4
	nvoDIEX2	X5
fbDIEX[3]	nvoDIEX1	X6
	nvoDIEX2	X7
fbDIEX[4]	nvoDIEX1	X8
	nvoDIEX2	X9
fbDIEX[5]	nvoDIEX1	XA
	nvoDIEX2	XB
fbDIEX[6]	nvoDIEX1	XC
	nvoDIEX2	XD
fbDIEX[7]	nvoDIEX1	XE
	nvoDIEX2	XF

■ FUNCTIONAL BLOCK: fbDIEX[0...7]

• Network Variables

Normal Mode

NETWORK VARIABLE	TYPE { Range } { Default }	EXPLANATIONS
nvoDIEX1	{SNVT_switch} {0.0 0}, {100.0 1} {0.0 0}	Outputs X0, X2, X4, X6, X8, XA, XC, XE status of the extension module
nvoDIEX2	{SNVT_switch} {0.0 0}, {100.0 1} {0.0 0}	Outputs X1, X3, X5, X7, X9, XB, XD, XF status of the extension module

Combination Mode

NETWORK VARIABLE	TYPE { Range } { Default }	EXPLANATIONS
nvoDIEX1	{SNVT_switch} {0.0 0}, {100.0 1} {0.0 0}	Contact input, nvoDIEX1 and nvoDIEX2 Reference Table
nvoDIEX2	{SNVT_switch} {0.0 0}, {100.0 1}, {Invalid} {0.0 -1}	

X0 X2 X4 X6 X8 XA XC XE	X1 X3 X5 X7 X9 XB XD XF	nvoDIEX1	nvoDIEX2
OFF	OFF	0.0 0 (OFF)	Invalid
ON	OFF	100.0 1 (ON)	Invalid
OFF	ON	0.0 0 (OFF)	0.0 0 (OFF)
ON	ON	100.0 1 (ON)	100.0 1 (ON)

• Configuration Properties

CONFIGURATION PROPERTY	NETWORK VARIABLE	TYPE { Range } { Default }	EXPLANATIONS
SCPTdirection	----	{SNVT_state} {0 or 1} {0,0,0,0,0,0,0,0, 0,0,0,0,0,0,0,0}	Bit 0, Bit 1: fbDIEX operating mode 0,0 : Normal mode 0,1 : Combination mode Bit 2 through 15 : Invalid
SCPTinvrtOut	nvoDIEX1	{SNVT_lev_disc} {ST_OFF, ST_ON} {ST_OFF}	Contact input logic is inverted at nvoDIEX1. ST_OFF : OFF at open contact, ON at closed contact ST_ON : ON at open contact, OFF at closed contact
SCPTinvrtOut	nvoDIEX2	{SNVT_lev_disc} {ST_OFF, ST_ON} {ST_OFF}	Contact input logic is inverted at nvoDIEX2. ST_OFF : OFF at open contact, ON at closed contact ST_ON : ON at open contact, OFF at closed contact