INSTRUCTION MANUAL

DC VOLTAGE/CURRENT INPUT MODULE, 4 points (LonWorks)

MODEL **R7L-SV4**

BEFORE USE ....

Thank you for choosing us. Before use, please check contents of the package you received as outlined below.
If you have any problems or questions with the product, please contact our sales office or representatives.

■ PACKAGE INCLUDES:

DC voltage/current input module .....(1)
NeuronID label .....(2)

■ MODEL NO.

Confirm Model No. marking on the product to be exactly what you ordered.

■ INSTRUCTION MANUAL

This manual describes necessary points of caution when you use this product, including installation, connection and basic maintenance procedures.
LNS Plug-in Software (model: R7LPLG) is usable to set up Functional Blocks. For detailed information, refer to the R7PLG Users Manual. The R7LPLG is downloadable at our web site.

POINTS OF CAUTION

■ POWER INPUT RATING & OPERATIONAL RANGE

- Locate the power input rating marked on the product and confirm its operational range as indicated below:
  24V AC rating: 24V ±10%, 50/60 Hz, approx. 100mA
  24V DC rating: 24V ±10%, approx. 50mA

■ GENERAL PRECAUTIONS

- Before you remove the unit or mount it, turn off the power supply and input signal for safety.
- Before you remove the terminal block or mount it, make sure to turn off the power supply and input signal for safety.

■ ENVIRONMENT

- Indoor use.
- When heavy dust or metal particles are present in the air, install the unit inside proper housing with sufficient ventilation.
- Do not install the unit where it is subjected to continuous vibration. Do not subject the unit to physical impact.
- Environmental temperature must be within -10 to +55°C (14 to 131°F) with relative humidity within 30 to 90% RH in order to ensure adequate life span and operation.

■ WIRING

- Do not install cables close to noise sources (relay drive cable, high frequency line, etc.).
- Do not bind these cables together with those in which noises are present. Do not install them in the same duct.
- Be sure to close the terminal cover for safety.

■ AND ....

- The unit is designed to function as soon as power is supplied, however, a warm up for 10 minutes is required for satisfying complete performance described in the data sheet.

COMPONENT IDENTIFICATION

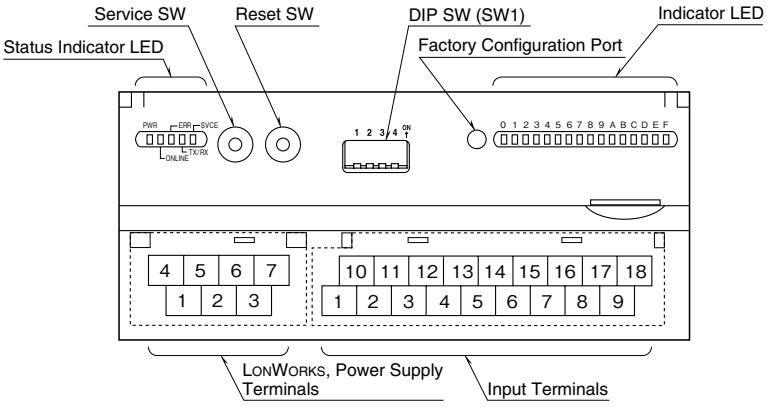

■ STATUS INDICATOR LED

ID	COLOR	STATE	MEANING
PWR	Green	ON	Internal 5V is normal
		OFF	Internal 5V is abnormal.
ONLINE	Green	ON	Online
		Blink approx. 0.5 Hz	Offline Sending/receiving of Network Variables has stopped.
		Blink approx. 2 Hz	Receiving Wink Message
		OFF	Abnormal state
ERR	Red	ON	Writing in the non-volatile memory
		Blink	Abnormal state
		OFF	Normal state
TX/RX	Green	ON	Sending/receiving Network Variables
		OFF	Communication is lost.
SVCE	Green	ON	No network information
		Blink approx. 0.5 Hz	Offline Sending/receiving of Network Variables has stopped.
		OFF	Normal state

■ INDICATOR LED

Used to show network variable status assigned to fbLED.

ON : LED ON
OFF : LED OFF

■ SERVICE SWITCH

Used to identify the node in LonWorks network configuration.

■ RESET SWITCH

Used to reset the Neuron Chip. Press the switch behind the front cover to reset.
Control functions are halted while completing resetting and restarting. Confirm no danger before conducting resetting.

■ OPERATING MODE SETTING

• Extension (SW1-1, 1-2)

SW1-1	SW1-2	Extension
OFF	OFF	No extension (*)
ON	OFF	Discrete input 8 or 16 points
OFF	ON	Discrete output 8 or 16 points

(*) Factory setting
Note: Be sure to set unused SW 1-3 and 1-4 to OFF
Note that the switch settings take precedence over the network parameter settings.

■ POWER SUPPLY, LonWorks TERMINAL ASSIGNMENT

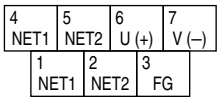

NO.	ID	FUNCTION, NOTES
1	NET1	LonWorks communication 1
2	NET2	LonWorks communication 2
3	FG	FG
4	NET1	LonWorks communication 1
5	NET2	LonWorks communication 2
6	U (+)	Power input
7	V (–)	Power input

Note: LonWorks wiring must be paired between NET1 terminals and/or NET2 terminals.

■ INPUT TERMINAL ASSIGNMENT

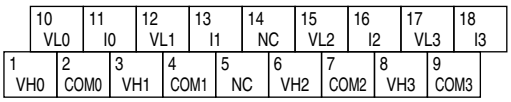

NO.	ID	FUNCTION	NO.	ID	FUNCTION
1	VH0	Wide span volt. 0	10	VL0	Narrow span volt. 0
2	COM0	Common 0	11	I0	Current range 0
3	VH1	Wide span volt. 1	12	VL1	Narrow span volt. 1
4	COM1	Common 1	13	I1	Current range 1
5	NC	No connection	14	NC	No connection
6	VH2	Wide span volt. 2	15	VL2	Narrow span volt. 2
7	COM2	Common 2	16	I2	Current range 2
8	VH3	Wide span volt. 3	17	VL3	Narrow span volt. 3
9	COM3	Common 3	18	I3	Current range 3

■ INPUT RANGE

- Wide span: -10 – +10V DC, -5 – +5V DC, 0 – 10V DC, 0 – 5V DC, 1 – 5V DC
- Narrow span: -1 – +1V DC, 0 – 1V DC, -0.5 – +0.5V DC, 0 – 0.5V DC
- Current input: -20 – +20mA DC, 0 – 20mA DC, 4 – 20mA DC

TERMINAL CONNECTIONS

Connect the unit as in the diagram below.

■ EXTERNAL DIMENSIONS unit: mm (inch)

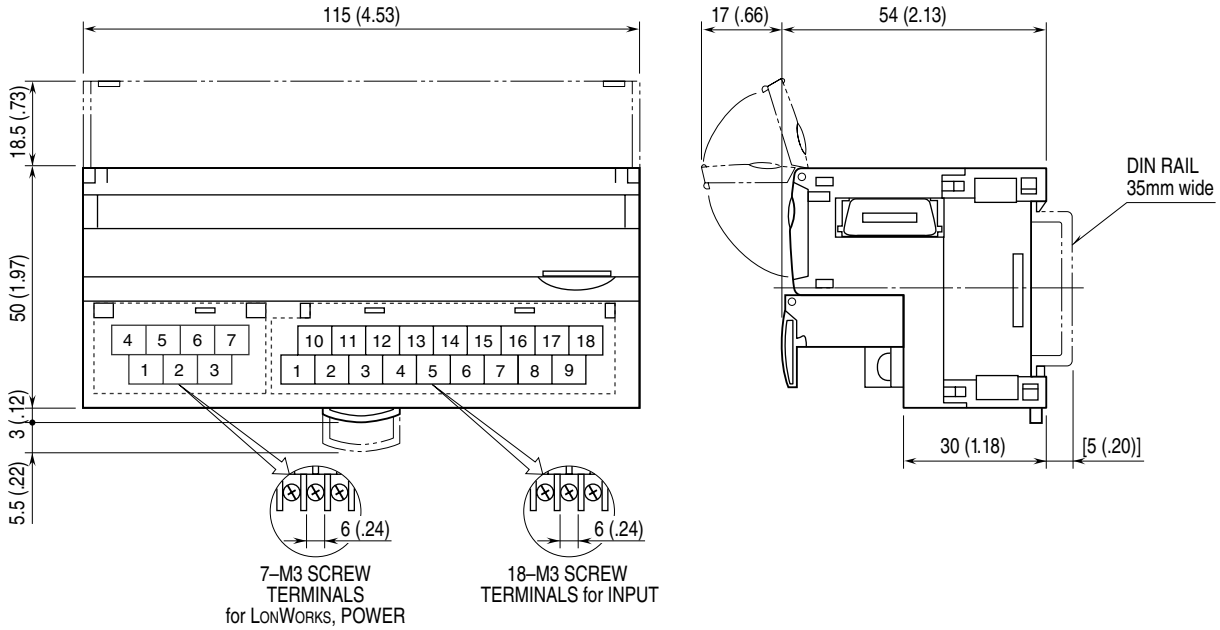

■ CONNECTION DIAGRAM

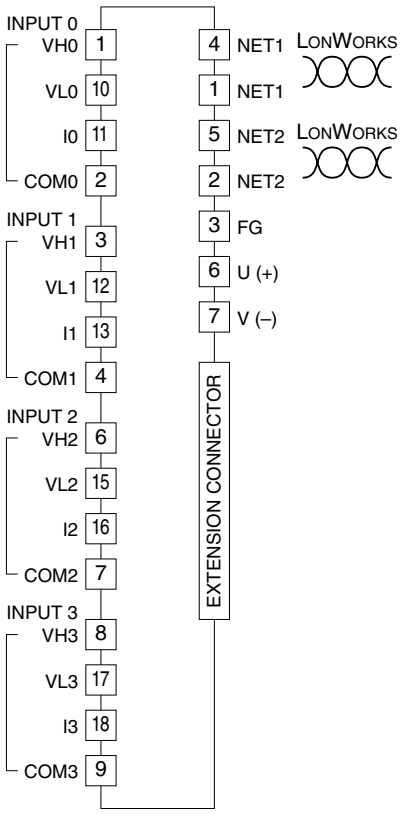

■ Input Connection Examples

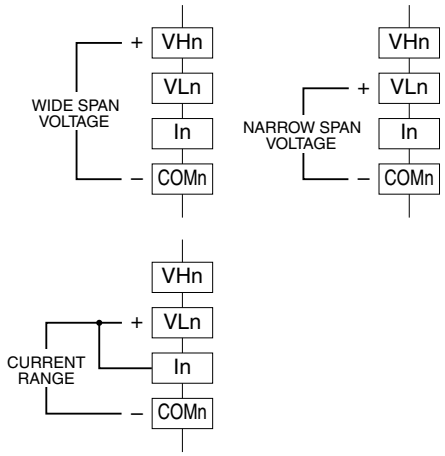

Be sure to close across VLn and In terminals for a current input.

COMMUNICATION CABLE CONNECTIONS

■ HOST PC CONNECTION

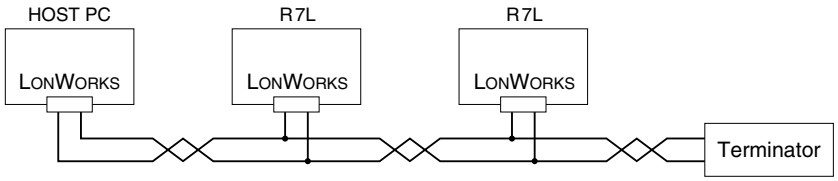

WIRING INSTRUCTIONS

■ SCREW TERMINAL

Torque: 0.5 N·m

■ SOLDERLESS TERMINAL

Refer to the drawing below for recommended ring tongue terminal size. Spade tongue type is also applicable.
Applicable wire size: 0.25 to 1.65 mm^2 (AWG 22 to 16)
Recommended manufacturer: Japan Solderless Terminal MFG. Co., Ltd, Nichifu Co., Ltd

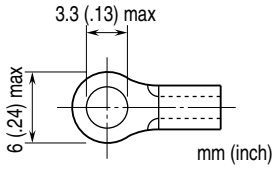

DEVICE INTERFACE FILE

Device Interface File (XIF) is used to define a LonWorks device when programmed on LonMaker.
For this module, the following file is used:

R7L-SV4v110.XIF

The XIF files are downloadable at our web site.
Note: In case that the Default value of Configuration Property is set in commission, be sure to set the Default value also in NvType.

FUNCTIONAL BLOCKS

■ NodeObject

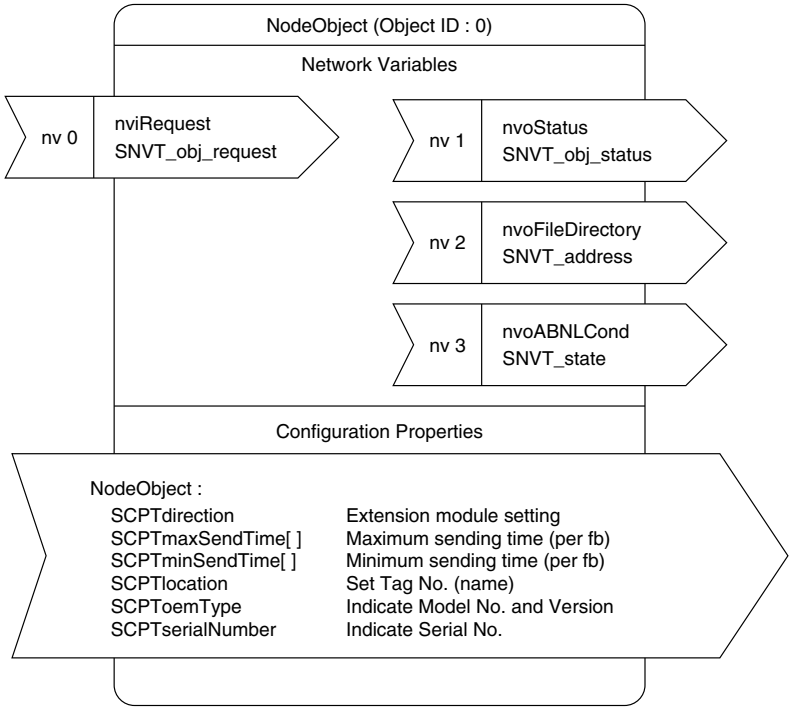

• Network Variables

NETWORK VARIABLE	TYPE { Range } { Default }	EXPLANATIONS
nviRequest	{SNVT_obj_request}	For use with LonMaker and other tools.
nvoStatus	{SNVT_obj_status}	For use with LonMaker and other tools.
nvoFileDirectory	{SNVT_address}	For use with LonMaker and other tools. Required to get access to Configuration Properties.
nvoABNLCond	{SNVT_state}	Shows the device status (All 0s in normal conditions). Bit 0 through Bit 3 : Input overrange error with Input 0 through 3 (≤ -15% or ≥ 115%) Bit 4 through Bit 7 : ADC error with Input 0 through 3 Bit 8, Bit 9 : Invalid Bit 10 : E^2PROM Configuration Property check sum error Bit 11 : E^2PROM Count data check sum error (Bit 10 and Bit 11 can be reset to 0 by RQ_CLEAR_STATUS against NodeObject.) Bit 12 through Bit 15 : Invalid

• Configuration Properties

CONFIGURATION PROPERTY	NETWORK VARIABLE	TYPE { Range } { Default }	EXPLANATIONS
SCPTdirection	----	{SNVT_state} {0 or 1} {0,0,0,0,0,0,0,0, 0,0,0,0,0,0,0,0}	Bit 0, Bit 1: Setting the extension module (Power supply must be reset when this configuration property is changed.) 0,0 : Without extension module 1,0 : Discrete input (fb and other settings assigned to the 9th and following points are invalid with 8-point input module.) 0,1 : Discrete output (fb and other settings assigned to the 9th and following points are invalid with 8-point output module.) Set this property before an extension module is connected. Bit 2 through Bit 15 : Invalid
SCPTmaxSendTime [Number of fb]	----	{SNVT_time_sec} {0.0,10.0...3600.0} {0.0}	Maximum time interval to send network variables (per fb). (Power supply must be reset when this configuration property is changed.) Network variables are sent out in the specified intervals even when there is no change in the value. No sending when a value less than 10.0 is set. Invalid property when the assigned fb has no network variables to be sent to the network.
SCPTminSendTime [Number of fb]	----	{SNVT_time_sec} {0.0,0.2...3600.0} {1.0}	Minimum time interval to send network variables (per fb). (Power supply must be reset when this configuration property is changed.) Network variables are sent out in the specified intervals even when there are changes in the value faster than the interval. No sending when a value less than 0.2 is set. Invalid property when the assigned fb has no network variables to be sent to the network.
SCPTlocation	----	{SNVT_str_asc} {30-character string} {“”}	Used to write Tag No. (name)
SCPToemType	----	{SNVT_str_asc} {e.g. “R7L-SV4_VER:0.10”}	Used to indicate Model No. and Version
SCPTserialNumber	----	{SNVT_str_asc} {e.g. “ZZ123456”}	Used to indicate Serial No.

■ FUNCTIONAL BLOCK: fbCNT[0...7]

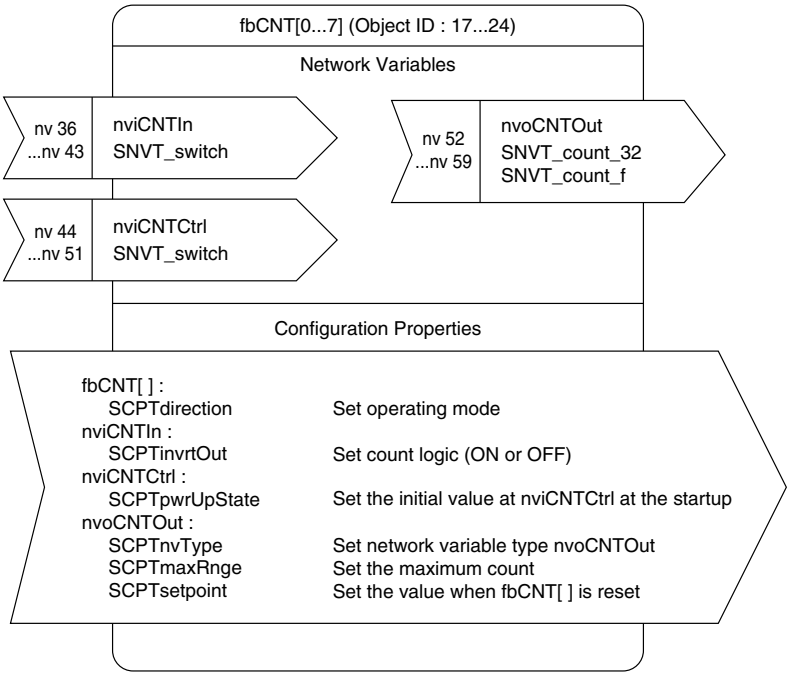

• Network Variables

NETWORK VARIABLE	TYPE { Range } { Default }	EXPLANATIONS
nviCNTIn	{SNVT_switch} {0.0 0}, {100.0 1}, {Invalid} {0.0 -1}	Counted object
nviCNTCtrl	{SNVT_switch} {0.0 0}, {100.0 1}, {Invalid} {100.0 1}	Controls operation of fbCNT 0.0 0 : Stop counting 100.0 1 : Start counting Invalid : Reset count value
nvoCNTOut	{SNVT_count_32} {0...999 999 999} {0} {SNVT_count_f} {0...999 999} {0}	Number of ON counts or accumulated time of ON status at nviCNTIn or the input terminal

• Configuration Properties

CONFIGURATION PROPERTY	NETWORK VARIABLE	TYPE { Range } { Default }	EXPLANATIONS
SCPTdirection	----	{SNVT_state} {0 or 1} {0,0,0,0,0,0,0,0, 0,0,0,0,0,0,0,0}	Bit 0 through 4: Counted object 0,0,0,0,0 : nviCNTIn 1,0,0,0,0 : ExX0 0,1,0,0,0 : ExX1 1,1,0,0,0 : ExX2 0,0,1,0,0 : ExX3 1,0,1,0,0 : ExX4 0,1,1,0,0 : ExX5 1,1,1,0,0 : ExX6 0,0,0,1,0 : ExX7 1,0,0,1,0 : ExX8 0,1,0,1,0 : ExX9 1,1,0,1,0 : ExXA 0,0,1,1,0 : ExXB 1,0,1,1,0 : ExXC 0,1,1,1,0 : ExXD 1,1,1,1,0 : ExXE 0,0,0,0,1 : ExXF ExX0 through ExXF: Extension discrete input Bit 6: Count function 0 : Number of status changes from OFF to ON 1 : Accumulated time of ON status Bit 7: Memory storage at the non-volatile memory 0 : Count retained in the memory and preset at the startup 1 : Count always reset to 0 Bit 5, 8 through 15 : Invalid Minimum input pulse width 500 ms for nviCNTIn, 50 ms for the input terminals. DO NOT connect a network variable to nviCNTIn when one of the input terminals (other than nviCNTIn) is assigned as the counted object. ON time per 1 second increments.
SCPTinvrtOut	nviCNTIn	{SNVT_lev_disc} {ST_OFF, ST_ON} {ST_OFF}	Count logic at nviCNTIn. ST_OFF : Count with nvoCNTIn = ON ST_ON : Count with nvoCNTIn = OFF
SCPTpwrUpState	nviCNTCtrl	{SNVT_switch} {0.0 0}, {100.0 1}, {Invalid} {100.0 1}	Set value applied at nviCNTCtrl when the power supply is turned on. 0.0 0 : Stop counting 100.0 1 : Start counting Invalid : Reset count value
SCPTnvType	nvoCNTOut	{SNVT_nv_type} {SNVT_count_f, SNVT_count_32} {SNVT_count_f}	Indicates nvoCNTOut type. For use with LonMaker and other tools.
SCPTmaxRnge	nvoCNTOut	Same as nvoCNTOut. Default = Max. range value available for the type	Maximum count for nvoCNTOut. Count reset to 0 and restarted at overflow. It is possible to set from 100 up to the maximum of the count value.
SCPTsetpoint	nvoCNTOut	Same as nvoCNTOut.	Set value applied at nvoCNTOut when fbCNT[ ] is Over-Ride.

■ FUNCTIONAL BLOCK: fbSV[0...3]

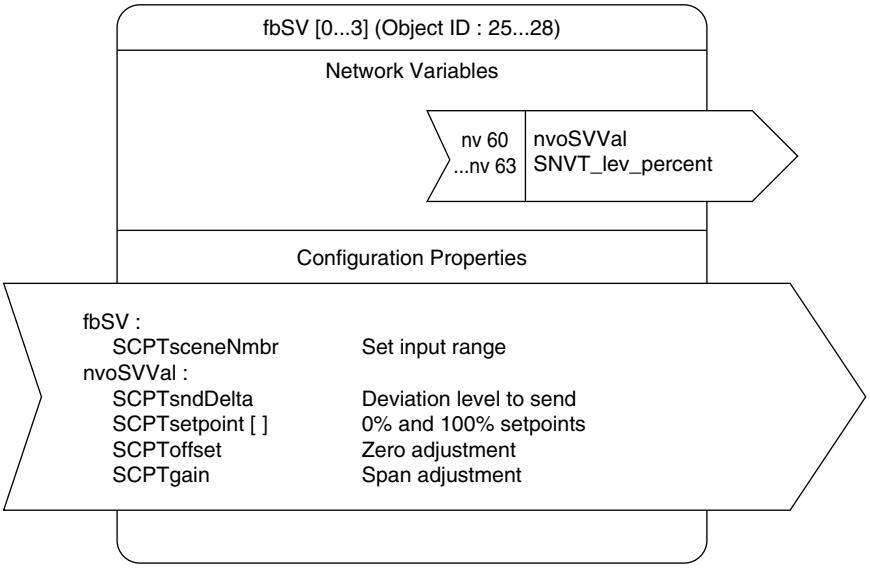

• Network Variables

NETWORK VARIABLE	TYPE { Range } { Default }	EXPLANATIONS
nvoSVVal	{SNVT_lev_percent} {-163.840...163.835} {0.000}	% output proportional to the voltage/current at Input 0 through 3.

• Configuration Properties

CONFIGURATION PROPERTY	NETWORK VARIABLE	TYPE { Range } { Default }	EXPLANATIONS
SCPTsceneNmbr	----	{} {0...11} {0}	Input range for Input 0 through 3 0 : -10.00 to 10.00 V 1 : -5.00 to 5.00 V 2 : -1.00 to 1.00 V 3 : 0.00 to 10.00 V 4 : 0.00 to 5.00 V 5 : 1.00 to 5.00 V 6 : 0.00 to 1.00 V 7 : -0.500 to 0.500 V 8 : 0.000 to 0.500 V 9 : -20.00 to 20.00 mA 10 : 4.00 to 20.00 mA 11 : 0.00 to 20.00 mA
SCPTsndDelta	nvoSVVal	{SNVT_lev_cont} {0.100...100.000} {1.000}	Minimum deviation required to send out the network variable.
SCPTsetpoint[0]	nvoSVVal	{SNVT_lev_percent} {-15.000...115.000} {0.000}	nvoSVVal lower range voltage/current in % of the input range. SCPTsetpoint[0] < SCPTsetpoint[1]
SCPTsetpoint[1]	nvoSVVal	{SNVT_lev_percent} {-15.000...115.000} {100.000}	nvoSVVal upper range voltage/current in % of the input range. SCPTsetpoint[0] < SCPTsetpoint[1]
SCPToffset	nvoSVVal	{SNVT_lev_percent} {-163.840...163.835} {0.000}	nvoSVVal zero (offset) adjustment. Added to the calculation result with SCPTsetpoint[0,1] and SCPTgain.
SCPTgain	nvoSVVal	{SNVT_muldiv (mulplier,divisor)} {0...32000,10000} {10000,10000}	nvoSVVal span (gain) adjustment. Gain = Multiplier / 10000 (Divisor is fixed at 10000.) Applied to SCPTsetpoint[0,1].

■ **FUNCTIONAL BLOCK: fbCV[0...3]**

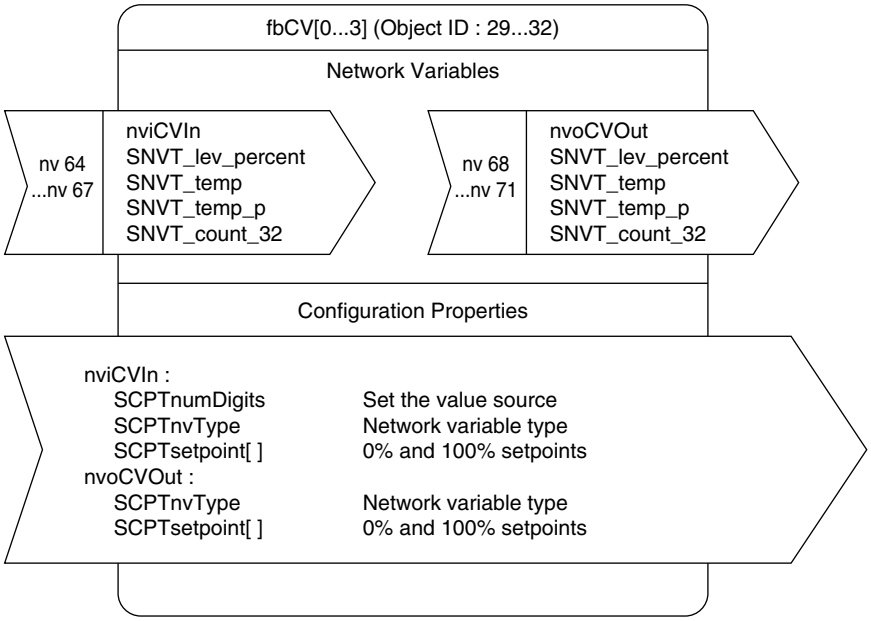

• **Network Variables**

NETWORK VARIABLE	TYPE { Range } { Default }	EXPLANATIONS
nviCVIn	{SNVT_lev_percent} {-163.840...163.835} {0.000} {SNVT_temp} {-274.0...6279.5} {0.0} {SNVT_temp_p} {-273.17...327.67} {0.00} {SNVT_count_32} {0...999 999 999} {0}	Inputs the value to be scaled.
nvoCVOut	{SNVT_lev_percent} {-163.840...163.835} {0.000} {SNVT_temp} {-274.0...6279.5} {0.0} {SNVT_temp_p} {-273.17...327.67} {0.00} {SNVT_count_32} {0...999 999 999} {0}	Outputs the scaled value.

• Configuration Properties

CONFIGURATION PROPERTY	NETWORK VARIABLE	TYPE { Range } { Default }	EXPLANATIONS
SCPTnumDigits	nviCVIn	{SNVT_count} {0,60...63} {0}	Source of the input to nviCVIn 0 : LonMaker bound output network variable 60 : fbSV[0] nvoSVVal 61 : fbSV[1] nvoSVVal 62 : fbSV[2] nvoSVVal 63 : fbSV[3] nvoSVVal Match nviCVIn network variable type to that of the source when using 60...63.
SCPTnvType	nviCVIn	{SNVT_nv_type} {} {SNVT_count_32}	Indicates nviCVIn type. For use with LonMaker and other tools.
SCPTnvType	nvoCVOut	{SNVT_nv_type} {} {SNVT_count_32}	Indicates nvoCVOut type. For use with LonMaker and other tools.
SCPTsetpoint[0]	nviCVIn	{SNVT_lev_percent} {-163.840...163.835} {-163.840} {SNVT_temp} {-274.0...6279.5} {-274.0} {SNVT_temp_p} {-273.17...327.67} {-273.17} {SNVT_count_32} {0...999 999 999} {0}	Scaling setting Output SCPTsetpoint[0] (nvoCVOut) is provided with the input SCPTsetpoint[0] (nviCVIn). Output SCPTsetpoint[1] (nvoCVOut) is provided with the input SCPTsetpoint[1] (nviCVIn). Output is proportionally provided to the input between these setpoints. SCPTsetpoint[0] < SCPTsetpoint[1]
SCPTsetpoint[1]	nviCVIn	{SNVT_lev_percent} {-163.840...163.835} {163.835} {SNVT_temp} {-274.0...6279.5} {6279.5} {SNVT_temp_p} {-273.17...327.67} {327.67} {SNVT_count_32} {0...999 999 999} {999 999 999}	
SCPTsetpoint[0]	nvoCVOut	{SNVT_lev_percent} {-163.840...163.835} {-163.840} {SNVT_temp} {-274.0...6279.5} {-274.0} {SNVT_temp_p} {-273.17...327.67} {-273.17} {SNVT_count_32} {0...999 999 999} {0}	
SCPTsetpoint[1]	nvoCVOut	{SNVT_lev_percent} {-163.840...163.835} {163.835} {SNVT_temp} {-274.0...6279.5} {6279.5} {SNVT_temp_p} {-273.17...327.67} {327.67} {SNVT_count_32} {0...999 999 999} {999 999 999}	

■ **FUNCTIONAL BLOCK: fbARM[0...3]**

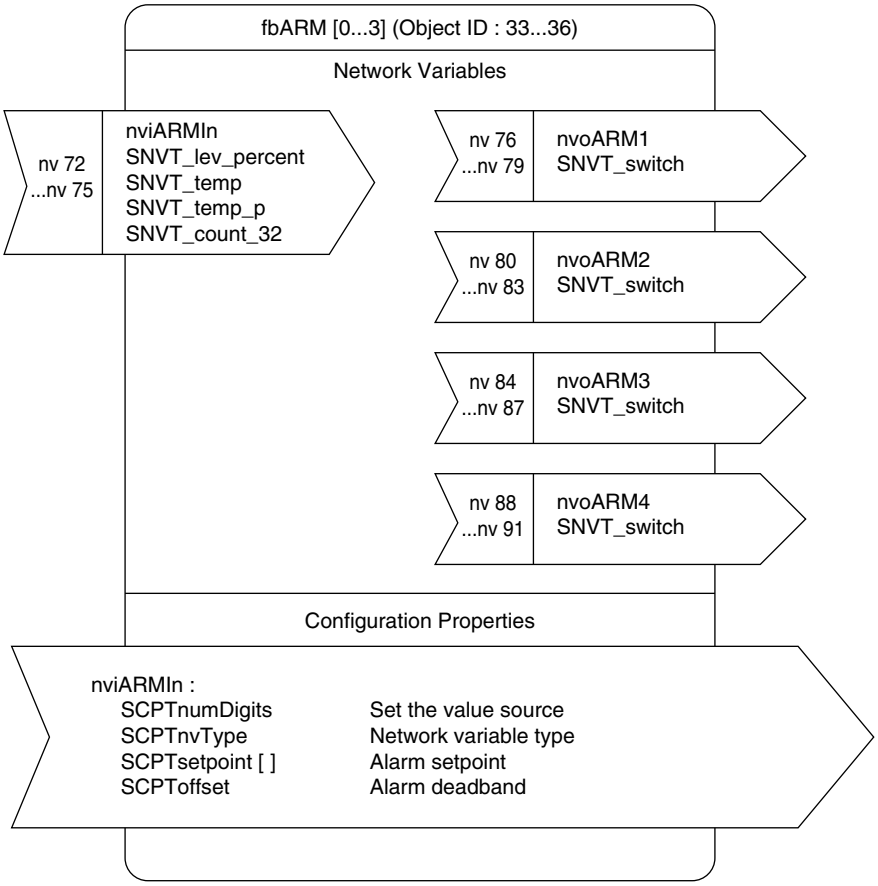

• **Network Variables**

NETWORK VARIABLE	TYPE { Range } { Default }	EXPLANATIONS
nviARMIn	{SNVT_lev_percent} {-163.840...163.835} {0.000} {SNVT_temp} {-274.0...6279.5} {0.0} {SNVT_temp_p} {-273.17...327.67} {0.00} {SNVT_count_32} {0...999 999 999} {0}	Inputs the value to be compared to the alarm setpoint.
nvoARM1	{SNVT_switch} {0.0 0}, {100.0 1} {0.0 -1}	nviARMIn alarm 1 (HH) {100.0 1} with nviARMIn ≥ SCPTsetpoint[0] Reset to {0.0 0} from {100.0 1} with nviARMIn < (SCPTsetpoint[0] – SCP-Toffset)
nvoARM2	{SNVT_switch} {0.0 0}, {100.0 1} {0.0 -1}	nviARMIn alarm 2 (H) {100.0 1} with nviARMIn ≥ SCPTsetpoint[1] Reset to {0.0 0} from {100.0 1} with nviARMIn < (SCPTsetpoint[1] – SCP-Toffset)
nvoARM3	{SNVT_switch} {0.0 0}, {100.0 1} {0.0 -1}	nviARMIn alarm 3 (L) {100.0 1} with nviARMIn ≤ SCPTsetpoint[2] Reset to {0.0 0} from {100.0 1} with nviARMIn > (SCPTsetpoint[2] + SCP-Toffset)
nvoARM4	{SNVT_switch} {0.0 0}, {100.0 1} {0.0 -1}	nviARMIn alarm 4 (LL) {100.0 1} with nviARMIn ≤ SCPTsetpoint[3] Reset to {0.0 0} from {100.0 1} with nviARMIn > (SCPTsetpoint[3] + SCP-Toffset)

• Configuration Properties

CONFIGURATION PROPERTY	NETWORK VARIABLE	TYPE { Range } { Default }	EXPLANATIONS
SCPTnumDigits	nviARMIn	{SNVT_count} {0,60...63,68...71} {0}	Source of the input to nviARMIn 0 : LonMaker bound output network variable 60 : fbSV[0] nvoSVVal 61 : fbSV[1] nvoSVVal 62 : fbSV[2] nvoSVVal 63 : fbSV[3] nvoSVVal 68 : fbCV[0] nvoCVOut 69 : fbCV[1] nvoCVOut 70 : fbCV[2] nvoCVOut 71 : fbCV[3] nvoCVOut Match nviARMIn network variable type to that of the source when using 60...63 or 68...71.
SCPTnvType	nviARMIn	{SNVT_nv_type} {} {SNVT_lev_percent}	Indicates nviARMIn type. For use with LonMaker and other tools.
SCPTsetpoint[0]	nviARMIn	{SNVT_lev_percent} {-163.840...163.835} {80.000} {SNVT_temp} {-274.0...6279.5} {80.0} {SNVT_temp_p} {-273.17...327.67} {80.00} {SNVT_count_32} {0...999 999 999} {10 000}	Alarm 1 (nvoARM1) setpoint
SCPTsetpoint[1]	nviARMIn	{SNVT_lev_percent} {-163.840...163.835} {60.000} {SNVT_temp} {-274.0...6279.5} {60.0} {SNVT_temp_p} {-273.17...327.67} {60.00} {SNVT_count_32} {0...999 999 999} {9 000}	Alarm 2 (nvoARM2) setpoint
SCPTsetpoint[2]	nviARMIn	{SNVT_lev_percent} {-163.840...163.835} {40.000} {SNVT_temp} {-274.0...6279.5} {40.0} {SNVT_temp_p} {-273.17...327.67} {40.00} {SNVT_count_32} {0...999 999 999} {1 000}	Alarm 3 (nvoARM3) setpoint
SCPTsetpoint[3]	nviARMIn	{SNVT_lev_percent} {-163.840...163.835} {20.000} {SNVT_temp} {-274.0...6279.5} {20.0} {SNVT_temp_p} {-273.17...327.67} {20.00} {SNVT_count_32} {0...999 999 999} {10}	Alarm 4 (nvoARM4) setpoint

SCPToffset	nviARMIn	{SNVT_lev_percent} {0.000...163.835} {5.000} {SNVT_temp} {0.0...6279.5} {5.0} {SNVT_temp_p} {0.00...327.67} {5.00} {SNVT_count_32} {0...999 999 999} {50}	Alarm deadband (hysteresis)

■ FUNCTIONAL BLOCK: fbLED

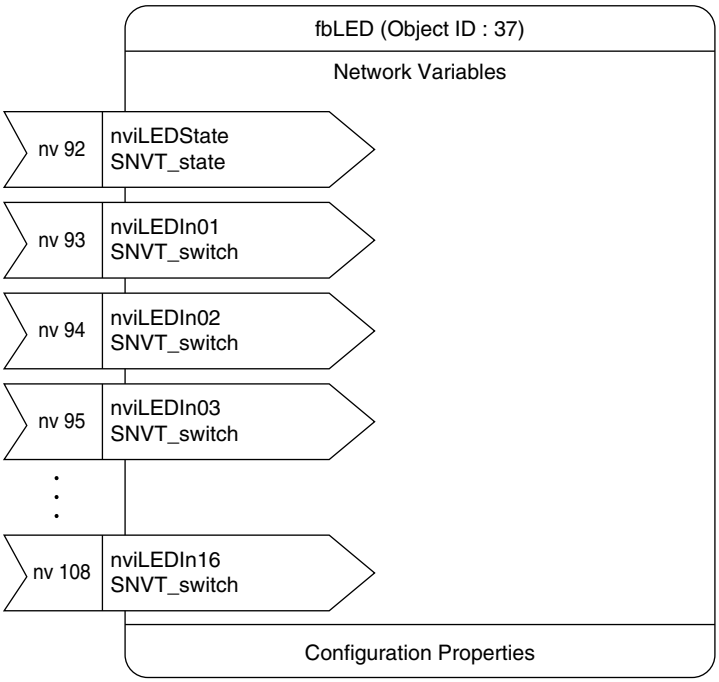

• Network Variables

NETWORK VARIABLE	TYPE { Range } { Default }	EXPLANATIONS
nviLEDState	{SNVT_state} {0 or 1} {0,0,0,0,0,0,0,0, 0,0,0,0,0,0,0,0}	The front LEDs (0...F) turn on/off according to the input. Bit 0 through Bit 15 assigned to LED 0 through F respectively. DO NOT use nviLEDIn01...nviLEDIn16 when nviLEDState is used.
nviLEDIn01... nviLEDIn16	{SNVT_switch} {0.0 0}, {100.0 1}, {Invalid} {0.0 0}	The front LEDs (0...F) turn on/off according to the input. 100.0 1 : LED ON Other : LED OFF DO NOT use nviLEDState when nviLEDIn01...nviLEDIn16 is used.

■ FUNCTIONAL BLOCK: fbDOEX[0...7]

This Functional Block is valid only when the output extension module is specified at NodeObject.

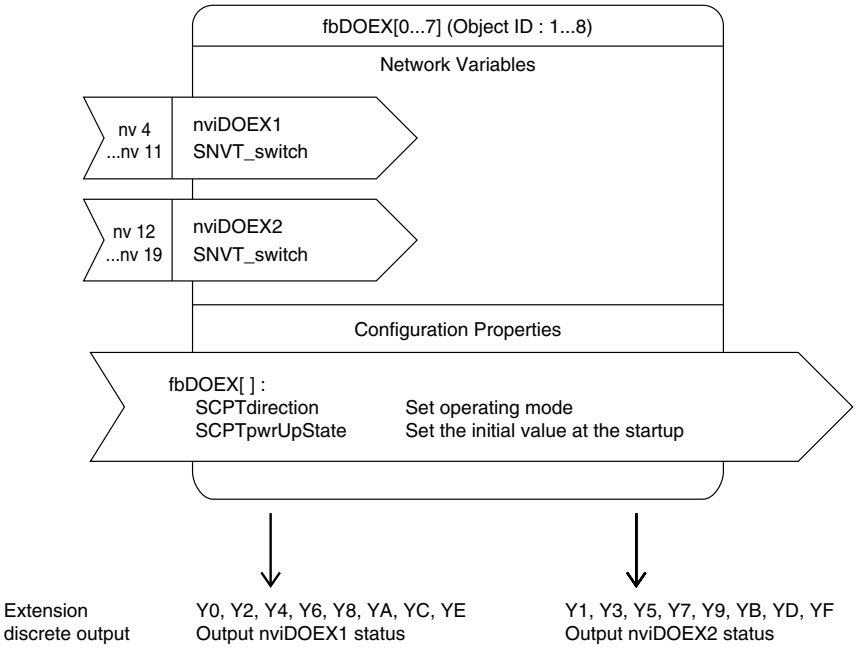

• Output Terminal v.s. fbDOEX Network Variables (nviDOEX1, nviDOEX2) Assignments

FUNCTIONAL BLOCK	NETWORK VARIABLE	OUTPUT TERMINAL
fbDOEX[0]	nviDOEX1	Y0
	nviDOEX2	Y1
fbDOEX[1]	nviDOEX1	Y2
	nviDOEX2	Y3
fbDOEX[2]	nviDOEX1	Y4
	nviDOEX2	Y5
fbDOEX[3]	nviDOEX1	Y6
	nviDOEX2	Y7
fbDOEX[4]	nviDOEX1	Y8
	nviDOEX2	Y9
fbDOEX[5]	nviDOEX1	YA
	nviDOEX2	YB
fbDOEX[6]	nviDOEX1	YC
	nviDOEX2	YD
fbDOEX[7]	nviDOEX1	YE
	nviDOEX2	YF

■ FUNCTIONAL BLOCK: fbDOEX[0...7]

• Network Properties

NETWORK VARIABLE	TYPE { Range } { Default }	EXPLANATIONS
nviDOEX1	{SNVT_switch} {0.0 0}, {100.0 1}, {Invalid} {0.0 0}	Turns on or off Y0, Y2, Y4, Y6, Y8, YA, YC, YE of the extension module depending upon this input. 100.0 1 : ON Other : OFF
nviDOEX2	{SNVT_switch} {0.0 0}, {100.0 1}, {Invalid} {0.0 0}	Turns on or off Y1, Y3, Y5, Y7, Y9, YB, YD, YF of the extension module depending upon this input. 100.0 1 : ON Other : OFF

• Configuration Properties

CONFIGURATION PROPERTY	NETWORK VARIABLE	TYPE { Range } { Default }	EXPLANATIONS
SCPTdirection	----	{SNVT_state} {0 or 1} {0,0,0,0,0,0,0,0, 0,0,0,0,0,0,0,0}	Bit 1: Output held or not at power off 0 : OFF at the power startup 1 : Outputs the held status at the power startup Bit 0, Bit 2 through 15 : Invalid
SCPTpwrUpState	nviDOEX1	{SNVT_switch} {0.0 0}, {100.0 1}, {Invalid} {0.0 0}	Set value applied at nviDOEX1 when the power supply is turned on.
SCPTpwrUpState	nviDOEX2	{SNVT_switch} {0.0 0}, {100.0 1}, {Invalid} {0.0 0}	Set value applied at nviDOEX2 when the power supply is turned on.

■ FUNCTIONAL BLOCK: fbDIEX[0...7]

This Functional Block is valid only when the input extension module is specified at NodeObject.

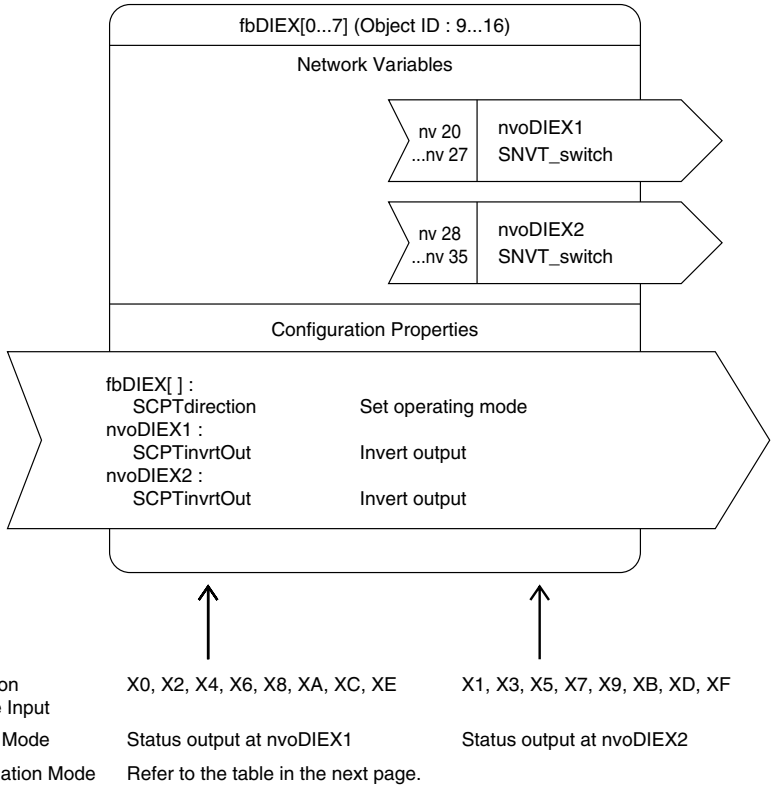

• Input Terminal v.s. fbDIEX Network Variables (nvoDIEX1, nvoDIEX2) Assignments

FUNCTIONAL BLOCK	NETWORK VARIABLE	INPUT TERMINAL
fbDIEX[0]	nvoDIEX1	X0
	nvoDIEX2	X1
fbDIEX[1]	nvoDIEX1	X2
	nvoDIEX2	X3
fbDIEX[2]	nvoDIEX1	X4
	nvoDIEX2	X5
fbDIEX[3]	nvoDIEX1	X6
	nvoDIEX2	X7
fbDIEX[4]	nvoDIEX1	X8
	nvoDIEX2	X9
fbDIEX[5]	nvoDIEX1	XA
	nvoDIEX2	XB
fbDIEX[6]	nvoDIEX1	XC
	nvoDIEX2	XD
fbDIEX[7]	nvoDIEX1	XE
	nvoDIEX2	XF

■ FUNCTIONAL BLOCK: fbDIEX[0...7]

• Network Variables

Normal Mode

NETWORK VARIABLE	TYPE { Range } { Default }	EXPLANATIONS
nvoDIEX1	{SNVT_switch} {0.0 0}, {100.0 1}, {Invalid} {0.0 0}	Outputs X0, X2, X4, X6, X8, XA, XC, XE status of the extension module
nvoDIEX2	{SNVT_switch} {0.0 0}, {100.0 1}, {Invalid} {0.0 0}	Outputs X1, X3, X5, X7, X9, XB, XD, XF status of the extension module

Combination Mode

NETWORK VARIABLE	TYPE { Range } { Default }	EXPLANATIONS
nvoDIEX1	{SNVT_switch} {0.0 0}, {100.0 1}, {Invalid} {0.0 0}	Contact input, nvoDIEX1 and nvoDIEX2 Reference Table
nvoDIEX2	{SNVT_switch} {0.0 0}, {100.0 1}, {Invalid} {0.0 -1}	

Contact input, nvoDIEX1 and nvoDIEX2 Reference Table

X0 X2 X4 X6 X8 XA XC XE	X1 X3 X5 X7 X9 XB XD XF	nvoDIEX1	nvoDIEX2
OFF	OFF	0.0 0 (OFF)	Invalid
ON	OFF	100.0 1 (ON)	Invalid
OFF	ON	0.0 0 (OFF)	0.0 0 (OFF)
ON	ON	100.0 1 (ON)	100.0 1 (ON)

• Configuration Properties

CONFIGURATION PROPERTY	NETWORK VARIABLE	TYPE { Range } { Default }	EXPLANATIONS
SCPTdirection	----	{SNVT_state} {0 or 1} {0,0,0,0,0,0,0,0, 0,0,0,0,0,0,0,0}	Bit 0, Bit 1: fbDIEX operating mode 0,0 : Normal mode 0,1 : Combination mode Bit 2 through 15 : Invalid
SCPTinvrtOut	nvoDIEX1	{SNVT_lev_disc} {ST_OFF, ST_ON} {ST_OFF}	Contact input logic is inverted at nvoDIEX1. ST_OFF : OFF at open contact, ON at closed contact ST_ON : ON at open contact, OFF at closed contact
SCPTinvrtOut	nvoDIEX2	{SNVT_lev_disc} {ST_OFF, ST_ON} {ST_OFF}	Contact input logic is inverted at nvoDIEX2. ST_OFF : OFF at open contact, ON at closed contact ST_ON : ON at open contact, OFF at closed contact