Plug-in Signal Conditioners M-UNIT

OPTICAL TRANSMITTER

Functions & Features
- Isolation up to several hundred thousand volts with a fiber optics cable
- High-density mounting

Typical Applications
- Ion implanter
- Electron-beam devices
- Dust chamber
- Protection against inductive noises in power substations

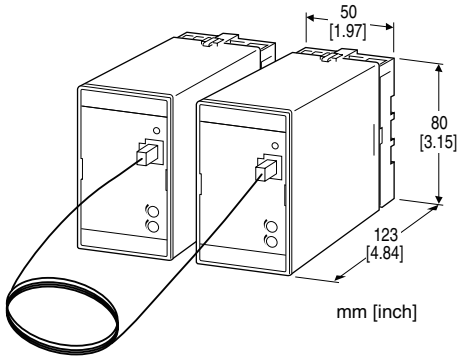

MODEL: OT2-[1]-[2][3]

ORDERING INFORMATION

- Code number: OT2-[1]-[2][3]

Specify a code from below for each of [1] through [3].
(e.g. OT2-6-B/Q)
- Special input range (For codes Z & 0)
- Specify the specification for option code /Q
(e.g. /C01/S01)

[1] INPUT

Current

A: 4 – 20 mA DC (Input resistance 250 Ω)
A1: 4 – 20 mA DC (Input resistance 50 Ω)
B: 2 – 10 mA DC (Input resistance 500 Ω)
C: 1 – 5 mA DC (Input resistance 1000 Ω)
D: 0 – 20 mA DC (Input resistance 50 Ω)
E: 0 – 16 mA DC (Input resistance 62.5 Ω)
F: 0 – 10 mA DC (Input resistance 100 Ω)
G: 0 – 1 mA DC (Input resistance 1000 Ω)
H: 10 – 50 mA DC (Input resistance 100 Ω)
Z: Specify current (See INPUT SPECIFICATIONS)

Voltage

1: 0 – 10 mV DC (Input resistance 10 kΩ min.)
2: 0 – 100 mV DC (Input resistance 100 kΩ min.)
3: 0 – 1 V DC (Input resistance 1 MΩ min.)
4: 0 – 10 V DC (Input resistance 1 MΩ min.)
5: 0 – 5 V DC (Input resistance 1 MΩ min.)
6: 1 – 5 V DC (Input resistance 1 MΩ min.)
4W: -10 – +10 V DC (Input resistance 1 MΩ min.)
0: Specify voltage (See INPUT SPECIFICATIONS)

[2] POWER INPUT

AC Power

B: 100 V AC
C: 110 V AC
D: 115 V AC
F: 120 V AC
G: 200 V AC
H: 220 V AC
J: 240 V AC

DC Power

S: 12 V DC
R: 24 V DC

[3] OPTIONS

blank: none
/Q: With options (specify the specification)

SPECIFICATIONS OF OPTION: Q (multiple selections)

COATING (For the detail, refer to our web site.)

/C01: Silicone coating
/C02: Polyurethane coating
/C03: Rubber coating

TERMINAL SCREW MATERIAL

/S01: Stainless steel

RELATED PRODUCTS

- Optical receiver (Model: OR2)
- Fiber optics cable:
  10 meters (model: AMPCP2-10M)
  20 meters (model: AMPCP2-20M)
  30 meters (model: AMPCP2-30M)

Optical cable used for the AMPCP2
Mitsubishi Chemical Super Eska SH 4001
Minimum bend radius: 25 mm
Tension strength: ≤ 70 N

Connector used for the AMPCP2
Broadcom HFBR-4532Z

MG CO., LTD.
www.mgco.jp

GENERAL SPECIFICATIONS

Construction: Plug-in
Transmission method: Light pulse (100 – 500 Hz)
Maximum transmission distance: 30 meters (98 ft)
Connection
  Input & power input: M3.5 screw terminals
  Optical fiber: Connector
Screw terminal: Chromated steel (standard) or stainless steel
Housing material: Flame-resistant resin (black)
Isolation: Input to power
Zero adjustment: -5 to +5 % (front)
Span adjustment: 95 to 105 % (front)
Power indicator LED: Green LED turns on when the power is supplied.

INPUT SPECIFICATIONS

■ **DC Current**:
Shunt resistor attached to the input terminals (0.5 W)
Specify input resistance value for code Z.
■ **DC Voltage**: -300 – +300 V DC
Minimum span: 10 mV
Offset: Max. 1.5 times span
Input resistance
Span 10 – 100 mV : ≥ 10 kΩ
Span 0.1 – 1 V : ≥ 100 kΩ
Span ≥ 1 V : ≥ 1 MΩ

INSTALLATION

Power input
•**AC**: Operational voltage range: rating ±10 %, 50/60 ±2 Hz, approx. 3 VA
•**DC**: Operational voltage range: rating ±10 %, ripple 10 %p-p max., approx. 2 W (80 mA at 24 V)
Operating temperature: -5 to +60°C (23 to 140°F)
Operating humidity: 30 to 90 %RH (non-condensing)
Mounting: Surface or DIN rail
Weight: 400 g (0.88 lb)

PERFORMANCE in percentage of span

Accuracy: ±0.3 % (Overall performance with the OT2 and OR2 combined)
Temp. coefficient: ±0.015 %/°C (±0.008 %/°F)
Response time: ≤ 0.6 second (0 – 90 %) (Overall performance with the OT2 and OR2 combined)
Line voltage effect: ±0.1 % over voltage range
Insulation resistance: ≥ 100 MΩ with 500 V DC
Dielectric strength: 2000 V AC @ 1 minute (input to power to ground)

MG CO., LTD.
www.mgco.jp

EXTERNAL VIEW

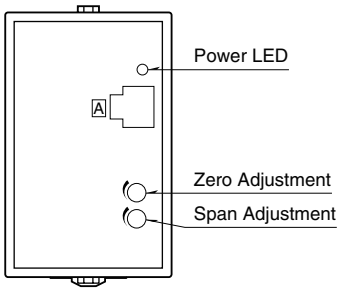

EXTERNAL DIMENSIONS unit: mm [inch]

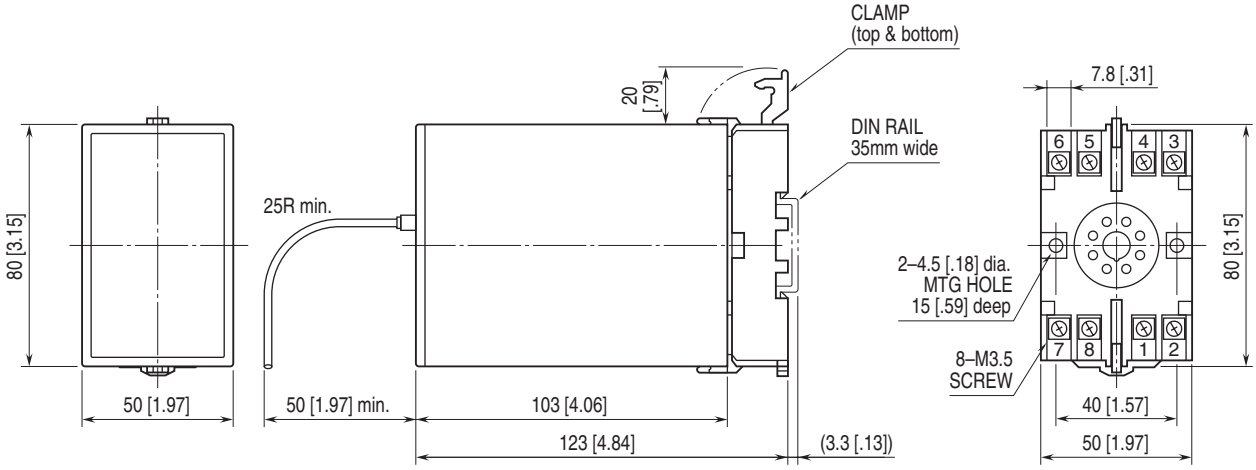

• When mounting, no extra space is needed between units.

TERMINAL ASSIGNMENTS unit: mm [inch]

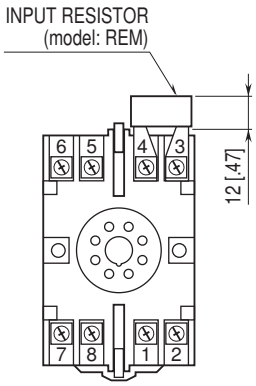

Input shunt resistor attached
for current input.

MG CO., LTD.
www.mgco.jp

SCHEMATIC CIRCUITRY & CONNECTION DIAGRAM

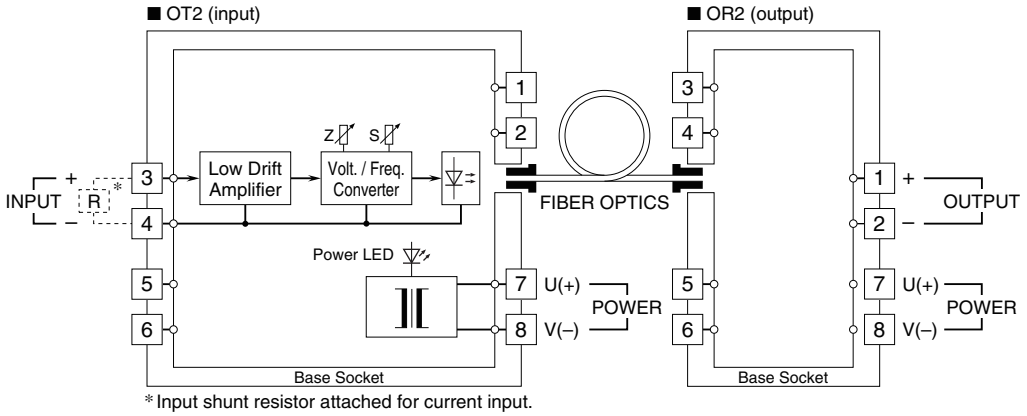

⚠ Specifications are subject to change without notice.

MG CO., LTD.
www.mgco.jp