Plug-in Signal Conditioners M-UNIT

THERMOCOUPLE RECEIVER

(fiber optics isolation)

Functions & Features

• Isolation up to several hundred thousand volts with a fiber optics cable
• ON/OFF temperature control signal
• High-density mounting

Typical Applications

• Ion implanter
• Electron-beam devices
• Dust chamber
• Protection against inductive noises in power substations

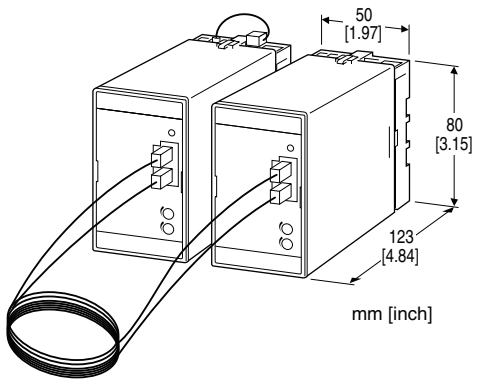

MODEL: OTR2-[1]-[2][3]

ORDERING INFORMATION

• Code number: OTR2-[1]-[2][3]
Specify a code from below for each of [1] through [3].
(e.g. OTR2-2-B/Q)
• Special output range (For codes Z & 0)
• Specify the specification for option code /Q
(e.g. /C01/S01)

[1] OUTPUT

Current

A: 4 – 20 mA DC (Load resistance 750 Ω max.)
B: 2 – 10 mA DC (Load resistance 1500 Ω max.)
C: 1 – 5 mA DC (Load resistance 3000 Ω max.)
D: 0 – 20 mA DC (Load resistance 750 Ω max.)
E: 0 – 16 mA DC (Load resistance 900 Ω max.)
F: 0 – 10 mA DC (Load resistance 1500 Ω max.)
G: 0 – 1 mA DC (Load resistance 15 kΩ max.)
Z: Specify current (See OUTPUT SPECIFICATIONS)

Voltage

1: 0 – 10 mV DC (Load resistance 10 kΩ min.)
2: 0 – 100 mV DC (Load resistance 100 kΩ min.)
3: 0 – 1 V DC (Load resistance 100 Ω min.)
4: 0 – 10 V DC (Load resistance 1000 Ω min.)
5: 0 – 5 V DC (Load resistance 500 Ω min.)
6: 1 – 5 V DC (Load resistance 500 Ω min.)
4W: -10 – +10 V DC (Load resistance 2000 Ω min.)
0: Specify voltage (See OUTPUT SPECIFICATIONS)

[2] POWER INPUT

AC Power

B: 100 V AC
C: 110 V AC
D: 115 V AC
F: 120 V AC
G: 200 V AC
H: 220 V AC
J: 240 V AC

DC Power

S: 12 V DC
R: 24 V DC

[3] OPTIONS

blank: none
/Q: With options (specify the specification)

SPECIFICATIONS OF OPTION: Q (multiple selections)

COATING (For the detail, refer to our web site.)

/C01: Silicone coating
/C02: Polyurethane coating
/C03: Rubber coating

TERMINAL SCREW MATERIAL

/S01: Stainless steel

RELATED PRODUCTS

• Thermocouple transmitter (model: OTT2)
• Fiber optics cable:
10 meters (model: AMPCP2-10M)
20 meters (model: AMPCP2-20M)
30 meters (model: AMPCP2-30M)

Optical cable used for the AMPCP2
Mitsubishi Chemical Super Eska SH 4001
Minimum bend radius: 25 mm
Tension strength: ≤ 70 N

Connector used for the AMPCP2
Broadcom HFBR-4532Z

MG CO., LTD.
www.mgco.jp

GENERAL SPECIFICATIONS

Construction: Plug-in
Transmission method: Light pulse (100 – 500 Hz)
Maximum transmission distance: 30 meters (98 ft)
Connection
  I/O & power input: M3.5 screw terminals
  Optical fiber: Connector
Screw terminal: Chromated steel (standard) or stainless steel
Housing material: Flame-resistant resin (black)
Isolation: Control input or output to power
Overrange output: Approx. -10 to +120 % at 1 – 5 V
Zero adjustment: -5 to +5 % (front)
Span adjustment: 95 to 105 % (front)
Power indicator LED: Green LED turns on when the power is supplied.

INPUT SPECIFICATIONS

■ **Temperature control signal**
Control input: Voltage pulse
Frequency: 1 Hz max. (ON pulse width ≥ 0.5 sec.)
ON/OFF levels: ≥ 7 V at ON (≤ 50 V); ≤ 1.5 V at OFF

OUTPUT SPECIFICATIONS

■ **DC Current**: 0 – 20 mA DC
Minimum span: 1 mA
Offset: Max. 1.5 times span
Load resistance: Output drive 15 V max.
■ **DC Voltage**: -10 – +12 V DC
Minimum span: 5 mV
Offset: Max. 1.5 times span
Load resistance: Output drive 10 mA max.; 5 mA for negative voltage output; at ≥ 0.5 V

INSTALLATION

Power input
•**AC**: Operational voltage range: rating ±10 %, 50/60 ±2 Hz, approx. 3 VA
•**DC**: Operational voltage range: rating ±10 % ripple 10 %p-p max., approx. 2.6 W (110 mA at 24 V)
Operating temperature: -5 to +60°C (23 to 140°F)
Operating humidity: 30 to 90 %RH (non-condensing)
Mounting: Surface or DIN rail
Weight: 350 g (0.77 lb)

PERFORMANCE in percentage of span

Accuracy: ±0.3 % (at over 400°C or 750°F for R, S and PR; over 770°C or 1420°F for B)
(Overall performance with the OTT2 and OTR2 combined)
Temp. coefficient: ±0.015 %/°C (±0.008 %/°F) (at over 770°C or 1420°F for B)
Response time: ≤ 0.6 second (0 – 90 %) (Overall performance with the OTT2 and OTR2 combined)
Line voltage effect: ±0.1 % over voltage range
Insulation resistance: ≥ 100 MΩ with 500 V DC
Dielectric strength: 2000 V AC @ 1 minute
(Temp. control input or output to power to ground)

MG CO., LTD.
www.mgco.jp

EXTERNAL VIEW

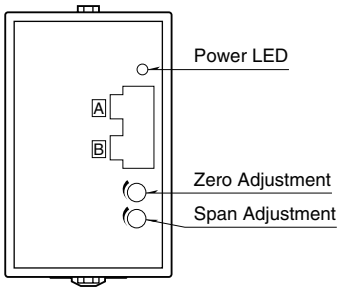

EXTERNAL DIMENSIONS & TERMINAL ASSIGNMENTS unit: mm [inch]

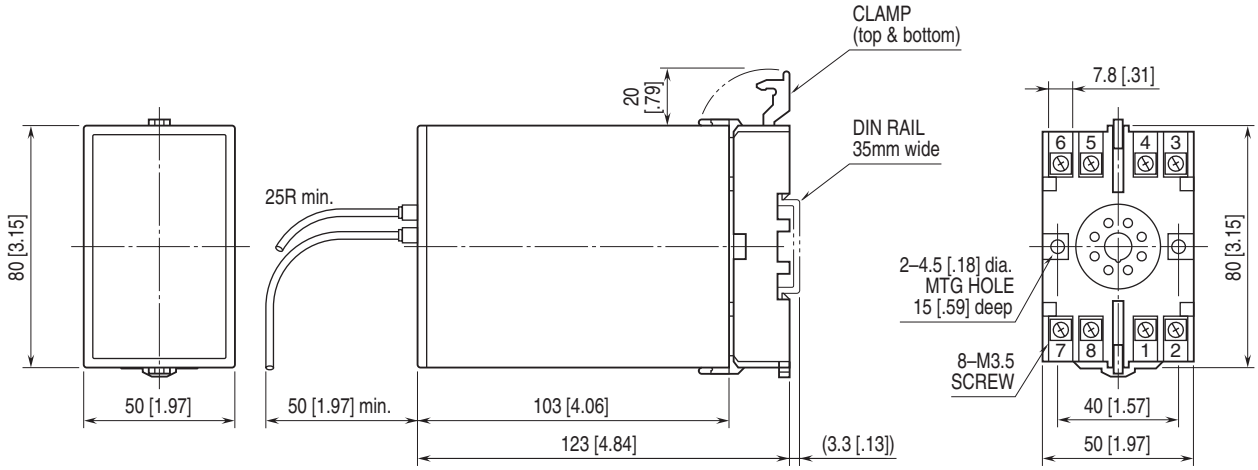

• When mounting, no extra space is needed between units.

SCHEMATIC CIRCUITRY & CONNECTION DIAGRAM

■ **OTT2 (input)** ■ **OTR2 (output)**

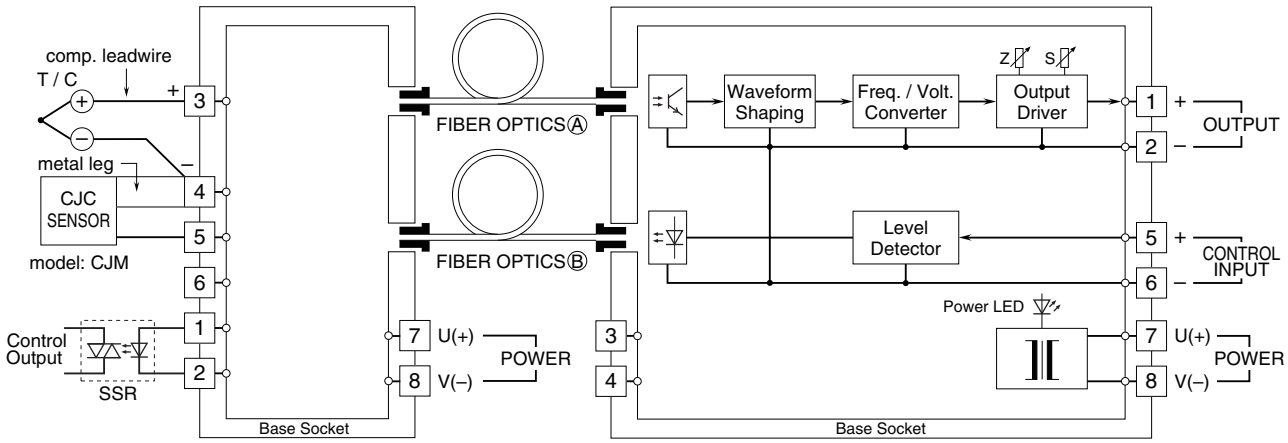

MG CO., LTD.
www.mgco.jp

FUNCTIONS

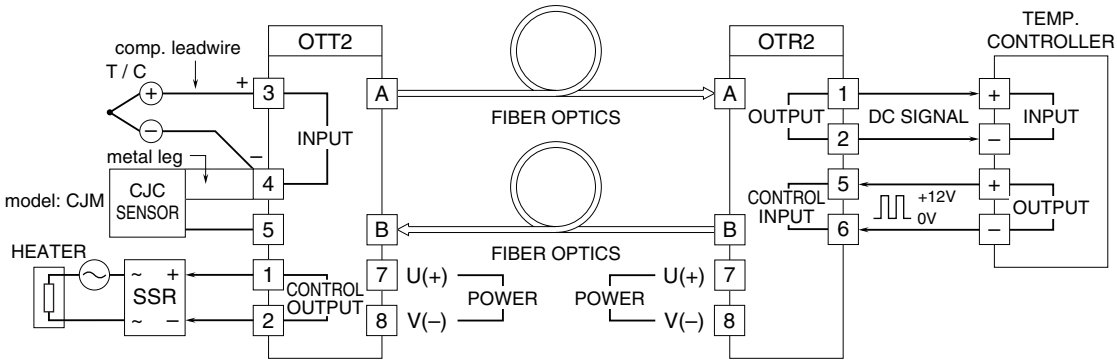

The OTT2 unit converts mV input signals from a thermocouple into light pulse reflections, and transmits them to the OTR2 unit via fiber optics cable (A), while the OTR2 converts the light pulse reflections into analog signals and output them to a temperature controller.
The OTR2 transmits also ON-OFF control signals from the controller in the same manner via fiber optics cable (B), to the OTT2 unit while produces voltage pulse signals for driving the SSR for the heater.
The SSR must accept a DC input and have zero-cross function.

⚠ Specifications are subject to change without notice.

MG CO., LTD.
www.mgco.jp