Remote I/O R7 Series

CC-Link I/O MODULE

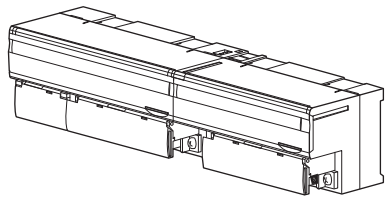

ORDERING INFORMATION

• Basic module: R7C-[1]-[2][3]
Specify a code from below for each of [1] through [3].
(e.g. R7C-DC16A-R/Q)
• Specify the specification for option code /Q
(e.g. /C01)
If you need factory setting, use Ordering Information Sheet (No. ESU-7801-x).

• Extension module: R7C-[1][2]
Specify a code from below for each of [1] and [2].
(e.g. R7C-EC16A/Q)
• Specify the specification for option code /Q
(e.g. /C01)

BASIC MODULE: R7C–[1]–[2][3]

[1] I/O TYPE

DA16: Discrete input, 16 points
DC16A: NPN transistor output, 16 points
(Not usable with R7C-EA8 or R7C-EA16)
DC16B: PNP transistor output, 16 points
(Not usable with R7C-EA8 or R7C-EA16)
DC8C: Relay contact output, 8 points
(Option /UL Not selectable)
(Not usable with 'extension' modules)
DC8E: Relay contact output, 8 points
(CE not available. Option /UL Not selectable)
(Not usable with R7C-EA8 or R7C-EA16)
(Terminating resistor incorporated)
RR4: Remote control relay control, 4 points
(CE not available. Option /UL Not selectable)
(Not usable with 'extension' modules)
(Terminating resistor incorporated)
SV4: DC voltage/current input (10 V/20 mA), 4 points
TS4: Thermocouple input, 4 points
RS4: RTD input, 4 points (Option /UL Not selectable)
RT4A: Thermistor input , 4 points
(CE not available. Option /UL Not selectable)
MS4: Potentiometer input, 4 points
(Option /UL Not selectable)
CT4E: AC current input, 4 points,
Clamp-on current sensor CLSE use
(Option /UL Not selectable)
PA8: Totalized pulse input, 8 points,
(CE not available, option /UL Not selectable)
(Terminating resistor incorporated)
DS4N: Current loop supply input, 4 points
(non-isolated, option /UL not selectable)
YV2: DC voltage output, 2 points
YV4:DC voltage output, 4 points
(Option /UL not selectable)
(Not usable with 'extension' modules)
(Terminating resistor incorporated)
YS2: DC current output, 2 points
YS4: DC current output, 4 points
(Option /UL not selectable)
(Not usable with 'extension' modules)
(Terminating resistor incorporated)

[2] POWER INPUT

DC Power
R: 24 V DC
(Operational voltage range 24 V ±10 %, ripple 10 %p-p max.)
Universal
AR: 24 V AC/24 V DC (Only for R7C-RR4, PA8, YV4 and YS4)
(Operational voltage range 24 V AC±10 %, 50 - 60 Hz /
24 V DC±10 %, ripple 10 %p-p max.)
(CE not available)

[3] OPTIONS

Standards & Approvals
blank: CE marking (Refer I/O TYPE code for exception)
/UL: UL approval, CE marking
Other Options
blank: none
/Q: Option other than the above (specify the specification)
(UL not available)

EXTENSION MODULE: R7C–[1][2]

[1] I/O TYPE

EA8: Discrete input, 8 points
(Option /UL Not selectable)
EA16: Discrete input, 16 points
EC8A: NPN transistor output, 8 points
(Option /UL Not selectable)
EC16A: NPN transistor output, 16 points

MG CO., LTD.
www.mgco.jp

EC8B: PNP transistor output, 8 points
(Option /UL Not selectable)
EC16B: PNP transistor output, 16 points
EC8C: Relay contact output, 8 points
(CE not available. Option /UL Not selectable)

[2] OPTIONS

STANDARDS & APPROVALS
blank: CE marking (Refer I/O TYPE code for exception)
/UL: UL approval, CE marking
Other Options
blank: none
/Q: Option other than the above (specify the specification)
(UL not available)

SPECIFICATIONS OF OPTION: Q

COATING (For the detail, refer to our web site.)
/C01: Silicone coating
/C02: Polyurethane coating
/C03: Rubber coating

FUNCTIONS & FEATURES

The R7C interfaces analog and discrete I/O signals with a PLC via CC-Link.
A 'basic' module can be attached with an 'extension' module. (Exceptions: refer to the I/O type specifications) By combining two modules, single station can handle mixed analog and discrete signals, 32-point discrete inputs, 32-point discrete outputs, 16-point discrete I/Os and other combinations of signals. Only the combination of basic discrete output and extension discrete input modules is not available.
Input sensor type (thermocouple, RTD) and range can be selected with the front DIP switches for all channels. In order to set different selections for individual channels, zero/span adjustments, scaling and temperature unit, use the PC Configurator Software (model: R7CON)

RELATED PRODUCTS

• PC configurator software (model: R7CON)
Downloadable at our web site.
A dedicated cable is required to connect the module to the PC. Please refer to the internet software download site or the users manual for the PC configurator for applicable cable types.
• Clamp-on current sensor (model: CLSE)
For R7C-CT4E, the clamp-on current sensors must be ordered separately. Required number depends upon the channel number.

PACKAGE INCLUDES...

• Terminating resistor (110 Ω, 0.5 W)
(Not provided for models terminating resistor incorporated)

GENERAL SPECIFICATIONS

■ Common Specifications
Power input:
24 V AC ±10 % (50 / 60 Hz)
24 V DC ±10 %; ripple 10 %p-p max.
Insulation resistance: ≥ 100 MΩ with 500 V DC
Dielectric strength: 1500 V AC @1 minute
(between isolated circuits)
Operating temperature: -10 to +55°C (14 to 131°F)
Operating humidity: 30 to 90 %RH (non-condensing)
Atmosphere: No corrosive gas or heavy dust
Storage temperature: -20 to +65°C (-4 to +149°F)
Mounting: DIN rail (35 mm wide)
Connection: M3 separable screw terminals
(torque 0.5 N·m)
Screw terminal material: Nickel-plated steel
Solderless terminal: Refer to the drawing at the end of the section.
Recommended manufacturer: Japan Solderless Terminal MFG.Co.Ltd, Nichifu Co.,ltd
Applicable wire size: 0.25 to 1.65 mm^2 (AWG22 to 16)
Housing material: Flame-resistant resin (gray)
Status indicator LED: PWR (Refer to the instruction manual for details)
■ DC Power Current Consumption & Weight
R7C-DA16: Approx. 60 mA, 200 g (0.44 lb)
R7C-DC16A: Approx. 75 mA, 200 g (0.44 lb)
R7C-DC16B: Approx. 75 mA, 200 g (0.44 lb)
R7C-DC8C: Approx. 60 mA (approx. 60 mA), 200 g (0.44 lb)
R7C-DC8E: Approx. 60 mA (approx. 60 mA), 200 g (0.44 lb)
R7C-RR4: Approx. 65 mA, 170 g (0.37 lb)
R7C-SV4: Approx. 90 mA, 200 g (0.44 lb)
R7C-TS4: Approx. 90 mA, 200 g (0.44 lb)
R7C-RS4: Approx. 90 mA, 200 g (0.44 lb)
R7C-RT4A: Approx. 95 mA, 200 g (0.44 lb)
R7C-MS4: Approx. 110 mA, 200 g (0.44 lb)
R7C-CT4E: Approx. 140 mA, 200 g (0.44 lb)
R7C-PA8: Approx. 70 mA, 200 g (0.44 lb)
R7C-DS4N: Approz. 70 mA, 200 g (0.44 lb)
R7C-YV2: Approx. 140 mA, 180 g (0.40 lb)
R7C-YV4: Approx. 90 mA, 180 g (0.40 lb)
R7C-YS2: Approx. 140 mA, 180 g (0.40 lb)
R7C-YS4: Approx. 160 mA, 180 g (0.40 lb)
R7C-EA8: Approx. 10 mA, 90 g (0.20 lb)
R7C-EA16: Approx. 20 mA, 150 g (0.33 lb)
R7C-EC8A: Approx. 10 mA, 90 g (0.20 lb)
R7C-EC16A: Approx. 20 mA, 150 g (0.33 lb)
R7C-EC8B: Approx. 10 mA, 90 g (0.20 lb)

R7C-EC16B: Approx. 20 mA, 150 g (0.33 lb)
R7C-EC8C: Approx. 40 mA, 150 g (0.33 lb)
The consumed current of supply power for the output is shown in ().

■ AC Power Current Consumption
R7C-RR4: Approx. 100 mA
R7C-PA8: Approx. 130 mA
R7C-YV4: Approx. 180 mA
R7C-YS4: Approx. 280 mA

■ Station Type
R7C-DA16: Remote I/O
R7C-DC16A: Remote I/O
R7C-DC16B: Remote I/O
R7C-DC8C: Remote I/O
R7C-DC8E: Remote I/O
R7C-RR4: Remote I/O
R7C-SV4: Remote device
R7C-TS4: Remote device
R7C-RS4: Remote device
R7C-RT4A: Remote device
R7C-MS4: Remote device
R7C-CT4E: Remote device
R7C-PA8: Remote device
R7C-DS4N: Remote device
R7C-YV2: Remote device
R7C-YV4: Remote device
R7C-YS2: Remote device
R7C-YS4: Remote device

■ **Recommended solderless terminal**

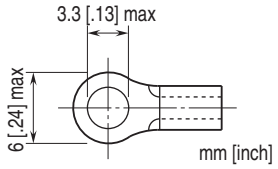

CC-Link COMMUNICATION

CC-Link: Ver.1.10
Network cable: CC-Link cable designated by Mitsubishi Electric
Station address setting: 1 - 64 (rotary switch, default:00)
Baud rate setting: 156 kbps (default), 625 kbps, 2.5 Mbps, 5 Mbps, 10 Mbps (rotary switch)
Status indicator LEDs: RUN, ERR, SD, RD

STANDARDS & APPROVALS

EU conformity:
EMC Directive
EMI EN 61000-6-4
EMS EN 61000-6-2
Low Voltage Directive
(Only R7C-DC8C conforms to it. Refer to the instruction manual for the detailed information.)
EN 61010-1, EN 61010-2-201
Measurement Category II (output)
Pollution Degree 2
Output to power: Basic insulation (150 V)
RoHS Directive
Approval:
UL/C-UL nonincendive Class I, Division 2, Groups A, B, C, and D
(ANSI/UL 121201, CAN/CSA-C22.2 No.213-17)
UL/C-UL general safety requirements
(UL 61010-1, CAN/CSA-C22.2 No.61010-1)
Note: This equipment is to be supplied by a Class 2 power supply when using as conformity with UL/C-UL.

EXTERNAL VIEW

■ **BASIC MODULE**

• **SIDE VIEW** • **FRONT VIEW**

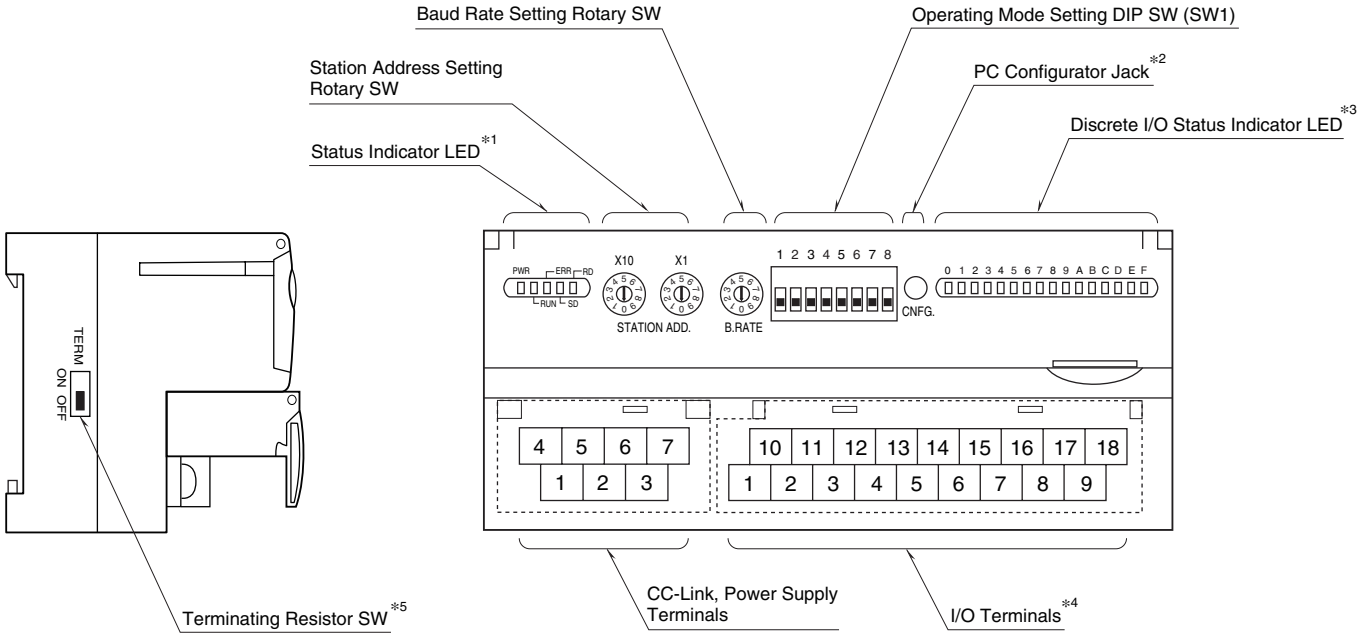

*1. Refer to 'Status Indicator LED' section for detailed information.
*2. Not available with discrete I/O modules.
*3. Not available with analog I/O modules.
*4. 10 screw terminals for analog output modules.
*5. Only for R7C-DC8E, RR4, PA8, YV4 and YS4.

■ **EXTENSION MODULE**

• **DISCRETE, 8 POINTS**

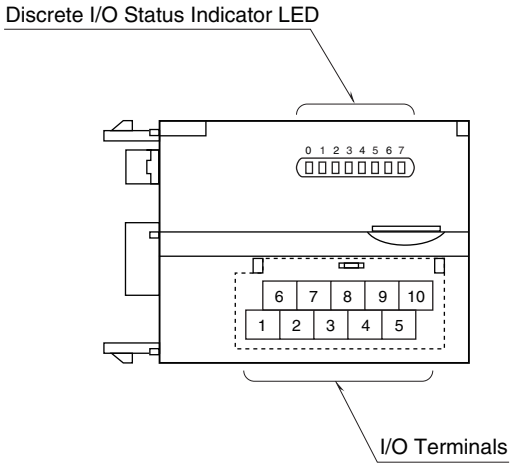

• **DISCRETE, 16 POINTS**

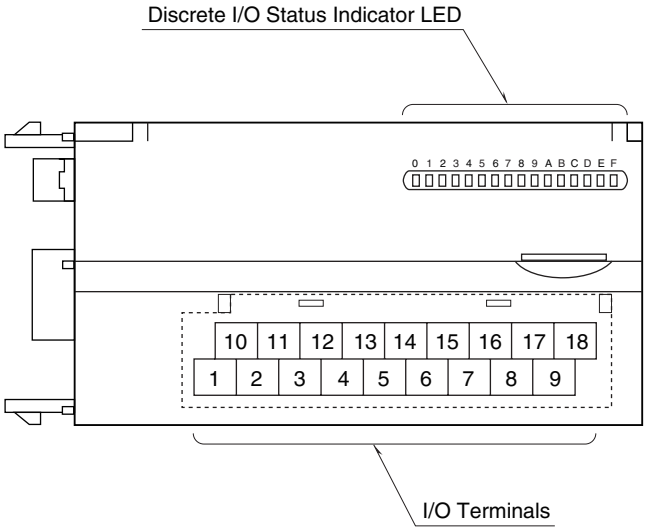

CONNECTION DIAGRAMS

■ **POWER SUPPLY, CC-LINK TERMINAL ASSIGNMENT**

• **Except R7C-RR4, PA8, YV4 and YS4**

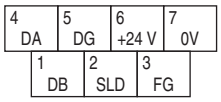

NO.	ID	FUNCTION, NOTES
1	DB	White
2	SLD	Shield
3	FG	FG
4	DA	Blue
5	DG	Yellow
6	+24 V	Power input (24 V DC)
7	0 V	Power input (0 V DC)

• **R7C-RR4, PA8, YV4 and YS4**

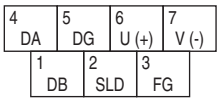

NO.	ID	FUNCTION, NOTES
1	DB	White
2	SLD	Shield
3	FG	FG
4	DA	Blue
5	DG	Yellow
6	U (+)	Power input
7	V (-)	Power input

■ **MASTER CONNECTION**

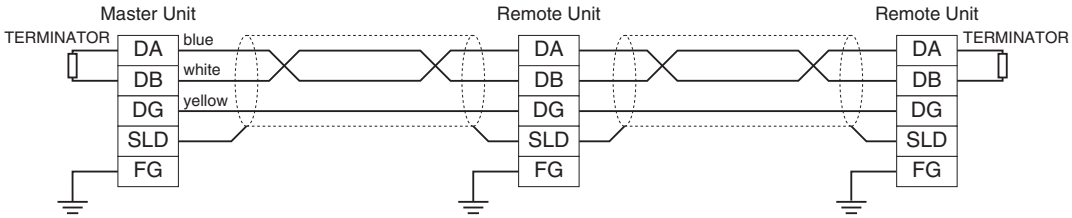

Be sure to connect the terminating resistor included in the product package to the unit at both ends of transmission line.
Or turn the terminating resistor SW ON for models with the resistor incorporated.
The terminator must be connected across DA and DB.
The Master Unit can be located other than at the extreme ends of transmission line.

INDICATOR LED

■ STATUS INDICATOR LED

PWR	RUN	ERR	SD*1	RD	STATUS*2
ON	ON	BL	BL	ON	Communicates normally with occasional CRC errors due to noise interference.
ON	ON	BL	BL	ON	Communicates normally but the Baud Rate and/or Station Address switches failed. ERR LED blinks approximately in 0.5 seconds intervals.
ON	ON	BL	BL	OFF	----
ON	ON	BL	OFF	ON	CRC error detected in the received data. Unable to respond.
ON	ON	BL	OFF	OFF	----
ON	ON	OFF	BL	ON	Normal communication
ON	ON	OFF	BL	OFF	----
ON	ON	OFF	OFF	ON	Unable to receive data addressed to the station.
ON	ON	OFF	OFF	OFF	----
ON	OFF	BL	BL	ON	Polling response is made but CRC error is detected in received refresh data.
ON	OFF	BL	BL	OFF	----
ON	OFF	BL	OFF	ON	CRC error detected in the data addressed to the station.
ON	OFF	BL	OFF	OFF	----
ON	OFF	OFF	BL	ON	Link is not started.
ON	OFF	OFF	BL	OFF	----
ON	OFF	OFF	OFF	ON	No data addressed to the station. Or unable to receive data addressed to the station due to noise interference. (Missing parts of the data sent from the master)
ON	OFF	OFF	OFF	OFF	Unable to receive data due to wire breakdown
ON	OFF	ON	OFF	ON/OFF	Faulty Baud Rate and/or Station Address setting
OFF	OFF	OFF	OFF	OFF	Power input removed or power supply failure.

OFF = OFF, ON = ON, BL = Blinking
*1. SD LED which is blinking may appear to be ON with high baud rate especially when fewer modules are connected.
*2. LED combinations indicated with "----" do not occur in normal operation unless LED failure or the like occurs.

■ DISCRETE I/O STATUS INDICATOR LED

Discrete I/O modules, including those for extensions, have LED indicators showing I/O signal status.
Totalized pulse modules have LED indicators showing input signal status.
Contact ON : LED ON
Contact OFF : LED OFF

DATA CONVERSION

■ 0 – 100% DATA CONVERSION

Analog input data is converted into digital representations of 0 – 100% proportional to each scaled range. The converted % values are multiplied by 100 and expressed in 16 bits.
Overrange input is possible from -15 to +115% of the nominal range. When the signal exceeds the limit, the data is fixed at -15% or +115% respectively. Negative value is represented in 2's complements.

• Input Range 0 – 5 V DC

Input Value	Input %	Converted Data, Decimal	Converted Data, Hex
≤ -0.75 V	-15%	-1500	FA24
0 V	0%	0	0
5 V	100%	10000	2710
≥ 5.75 V	115%	11500	2CEC

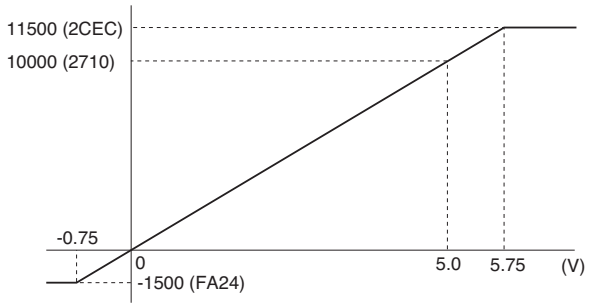

Analog output is converted in the reverse order of the input data. The output range 0 – 5 V DC is expressed as 10000 at 5.0 V (100%) and 0 at 0 V (0%).

■ ENGINEERING UNIT CONVERSION

Engineering unit value °C or K is multiplied by 10 and expressed in 16 bits. °F data is represented in engineering unit value, without multiplication. Engineering unit value A is multiplied by 100 or 1000, expressed in 16 bits. Negative value is represented in 2's complements.

• Input TYPE K Thermocouple

Input Value	Converted Data, Decimal	Converted Data, Hex
≤ -272°C	-2720	F560
-150°C	-1500	FA24
1370°C	13700	3584
≥ 1472°C	14720	3980

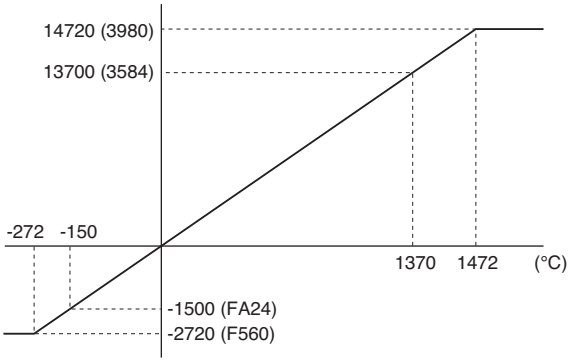

■ COUNT VALUE

The count value is 32-bit data. It is divided in 2 words of 16 bits represented with 2 addresses.The lower address is allocated in the lower word (LSB) and the upper address in the upper word (MSB). The count value is 0 - 4 294 967 295. The maximum count value available is 1 000 - 4 294 967 295. In case of overflow, the vaule is reset to 0 or 1 (configurable) from which the count will restart. The preset of the count value is also available. Use the R7CON or commands for the configuration.

DATA ALLOCATION

■ R7C-DA16

	Interval-timed Response (X)		Refresh Data (Y)
RX(n+0)	R7C-DA16	RY(n+0)	Unused
RX(n+1)	Unused	RY(n+1)	

■ R7C-DA16 + R7C-EA16

	Interval-timed Response (X)		Refresh Data (Y)
RX(n+0)	R7C-DA16	RY(n+0)	Unused
RX(n+1)	R7C-EA16	RY(n+1)	

■ R7C-DA16 + R7C-EC16x

	Interval-timed Response (X)		Refresh Data (Y)
RX(n+0)	R7C-DA16	RY(n+0)	Unused
RX(n+1)	Unused	RY(n+1)	R7C-EC16x

■ R7C-DC16x

	Interval-timed Response (X)		Refresh Data (Y)
RX(n+0)	Unused	RY(n+0)	R7C-DC16x
RX(n+1)		RY(n+1)	Unused

■ R7C-DC16x + R7C-EC16x

	Interval-timed Response (X)		Refresh Data (Y)
RX(n+0)	Unused	RY(n+0)	R7C-DC16x
RX(n+1)		RY(n+1)	R7C-EC16x

■ R7C-DC8x

	Interval-timed Response (X)		Refresh Data (Y)
RX(n+0)	Unused	RY(n+0)	R7C-DC8C
RX(n+1)		RY(n+1)	Unused

■ R7C-DC8E + R7C-EC16x

	Interval-timed Response (X)		Refresh Data (Y)
RX(n+0)	Unused	RY(n+0)	R7C-DC8E
RX(n+1)		RY(n+1)	R7C-EC16x

■ R7C-RR4

	Interval-timed Response (X)		Refresh Data (Y)
RX(n+0)	R7C-RR4	RY(n+0)	R7C-RR4
RX(n+1)	Unused	RY(n+1)	Unused

■ **R7C-PA8**

• **Data allocation 1**

	Interval timed Response (X)		Refresh Data (Y)
RX (n+0)	RX (n+0) D – RX (n+0) 0: Command	RY (n+0)	RY (n+0) A – RY (n+0) 0: Command
RX (n+1)	Unused	RY (n+1)	Unused

	Interval-timed Response (X)		Refresh Data (Y)
RWr (n+0)	Input extension	RWw (n+0)	Output extension
RWr (n+1)	Unused	RWw (n+1)	Unused
RWr (n+2)	Count data (LSB)	RWw (n+2)	Preset data (LSB)
RWr (n+3)	Count data (MSB)	RWw (n+3)	Preset data (MSB)

• **Data allocation 4**

	Interval-timed Response (X)		Refresh Data (Y)
RX (n+0)	RX (n+0) D – RX (n+0) 0: Command	RY (n+0)	RY (n+0)A – RY (n+0) 0: Command
RX (n+1)	Input extension	RY (n+1)	Output extension

	Interval-timed Response (X)		Refresh Data (Y)
RWr (n+0)	ch0 Count data (LSB)	RWw (n+0)	ch0 Preset data (LSB)
RWr (n+1)	ch0 Count data (MSB)	RWw (n+1)	ch0 Preset data (MSB)
RWr (n+2)	ch1 Count data (LSB)	RWw (n+2)	ch1 Preset data (LSB)
RWr (n+3)	ch1 Count data (MSB)	RWw (n+3)	ch1 Preset data (MSB)
RWr (n+4)	ch2 Count data (LSB)	RWw (n+4)	ch2 Preset data (LSB)
RWr (n+5)	ch2 Count data (MSB)	RWw (n+5)	ch2 Preset data (MSB)
RWr (n+6)	ch3 Count data (LSB)	RWw (n+6)	ch3 Preset data (LSB)
RWr (n+7)	ch3 Count data (MSB)	RWw (n+7)	ch3 Preset data (MSB)
RWr (n+8)	ch4 Count data (LSB)	RWw (n+8)	ch4 Preset data (LSB)
RWr (n+9)	ch4 Count data (MSB)	RWw (n+9)	ch4 Preset data (MSB)
RWr (n+10)	ch5 Count data (LSB)	RWw (n+10)	ch5 Preset data (LSB)
RWr (n+11)	ch5 Count data (MSB)	RWw (n+11)	ch5 Preset data (MSB)
RWr (n+12)	ch6 Count data (LSB)	RWw (n+12)	ch6 Preset data (LSB)
RWr (n+13)	ch6 Count data (MSB)	RWw (n+13)	ch6 Preset data (MSB)
RWr (n+14)	ch7 Count data (LSB)	RWw (n+14)	ch7 Preset data (LSB)
RWr (n+15)	ch7 Count data (MSB)	RWw (n+15)	ch7 Preset data (MSB)

■ ANALOG INPUT

• Models R7C-SV4, R7C-TS4, R7C-RS4, R7C-RT4A, R7C-MS4, R7C-CT4E, R7C-DS4N

	Interval-timed Response (X)
RWr n+0	Analog input 0
+1	Analog input 1
+2	Analog input 2
+3	Analog input 3

	Refresh Data (Y)
RWw n+0	Unused
+1	Unused
+2	Unused
+3	Unused

• Without Extension Module

	Interval-timed Response (X)
RX(n+0)	Status
RX(n+1)	Reserved

	Refresh Data (Y)
RY(n+0)	Unused
RY(n+1)	

• With Extension Module R7C-EA16

	Interval-timed Response (X)
RX(n+0)	R7C-EA16
RX(n+1)	Reserved

	Refresh Data (Y)
RY(n+0)	Unused
RY(n+1)	

• With Extension Module R7C-EC16x

	Interval-timed Response (X)
RX(n+0)	Status
RX(n+1)	Reserved

	Refresh Data (Y)
RY(n+0)	R7C-EC16x
RY(n+1)	Unused

■ ANALOG OUTPUT

• Models R7C-YV2, R7C-YV4, R7C-YS2, R7C-YS4

	Interval-timed Response (X)
RWr n+0	Unused
+1	Unused
+2	Unused
+3	Unused

	Refresh Data (Y)
RWw n+0	Analog output 0
+1	Analog output 1
+2	Analog output 2 (R7C-YV2, YS2 are unused)
+3	Analog output 3 (R7C-YV2, YS2 are unused)

• Without Extension Module

	Interval-timed Response (X)
RX(n+0)	Unused
RX(n+1)	Reserved

	Refresh Data (Y)
RY(n+0)	Unused
RY(n+1)	

• With Extension Module R7C-EA16

	Interval-timed Response (X)
RX(n+0)	R7C-EA16
RX(n+1)	Reserved

	Refresh Data (Y)
RY(n+0)	Unused
RY(n+1)	

• With Extension Module R7C-EC16x

	Interval-timed Response (X)
RX(n+0)	Unused
RX(n+1)	Reserved

	Refresh Data (Y)
RY(n+0)	R7C-EC16x
RY(n+1)	Unused

I/O DATA DESCRIPTIONS

■ **DISCRETE I/O**

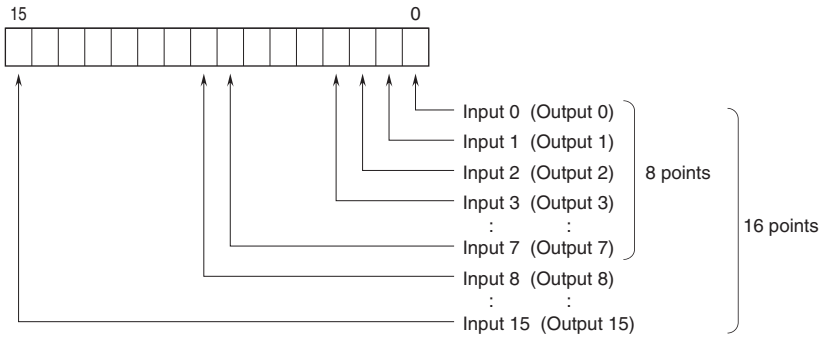

0 : OFF
1 : ON

■ **R7C-RR4**

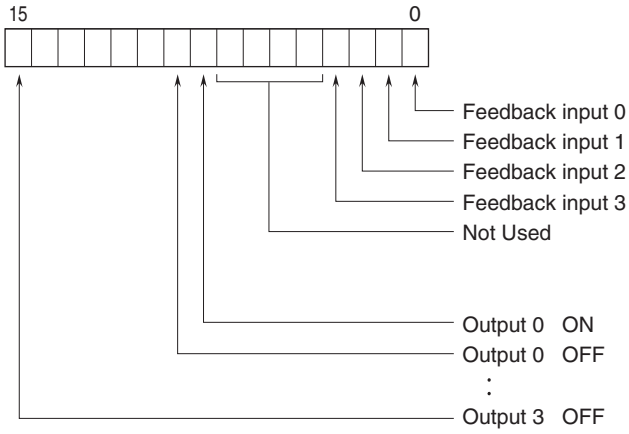

0: OFF 1: ON

■ **R7C–PA8**

• **RX (n+0)**

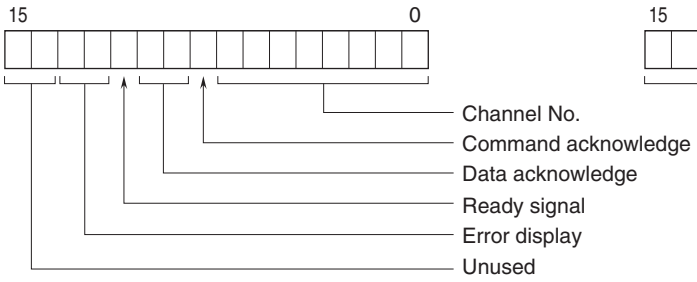

• **RY (n+0)**

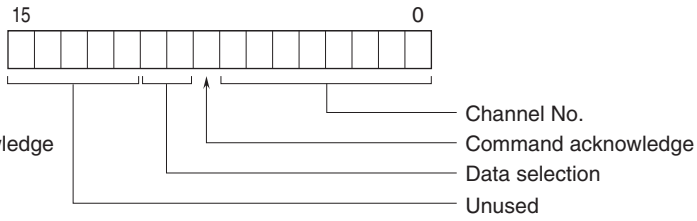

■ **ANALOG I/O**

16-bit binary data
Negative values represented in 2's complements

MG CO., LTD.
www.mgco.jp

■ **STATUS**

Analog input modules without extension module (models: R7C-SV4, R7C-TS4, R7C-RS4, R7C-RT4A, R7C-MS4, R7C-CT4E, R7C-DS4N) can show input status of each channel. Analog output modules (models: R7C-YV2, R7C-YV4, R7C-YS2, R7C-YS4), discrete I/O modules (models: R7C-DA16, R7C-DCx, R7C-RR4) and Totalized pulse input module (R7C-PA8) show '0' at the same address.

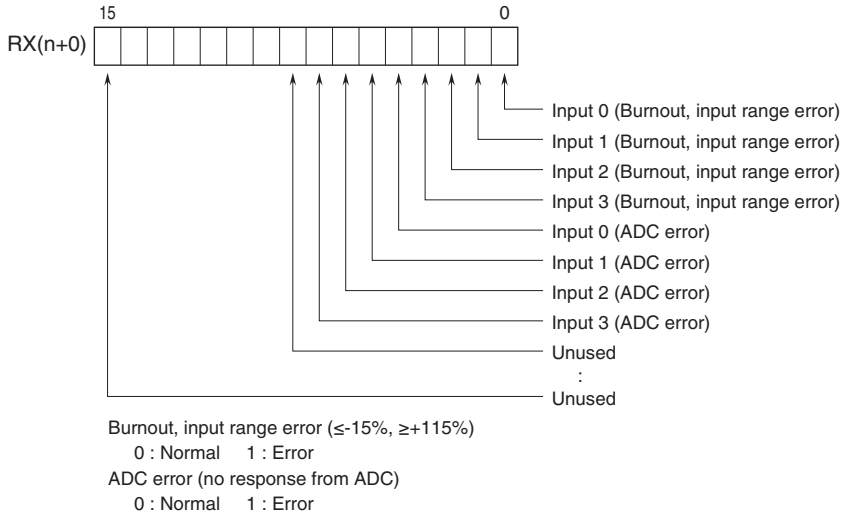

EXTENSION MODULE

A 'basic' module can be attached with one 'extension' module. The extension module is powered from the basic module. By combining two modules, single station can handle mixed analog and discrete signals, 32-point discrete inputs, 32-point discrete outputs, 16-point discrete I/Os and other combinations of signals.

■ MODULE COMBINATIONS

(Basic module: Extension modules)

R7C-DA16: R7C-EA8, R7C-EA16, R7C-EC8A, R7C-EC16A, R7C-EC8B, R7C-EC16B, R7C-EC8C
R7C-DC16A*1: R7C-EC8A, R7C-EC16A, R7C-EC8B, R7C-EC16B, R7C-EC8C
R7C-DC16B*1: R7C-EC8A, R7C-EC16A, R7C-EC8B, R7C-EC16B, R7C-EC8C
R7C-DC8C*2: ----
R7C-DC8E*1:R7C-EC8A, R7C-EC16A, R7C-EC8B, R7C-EC16B, R7C-EC8C
R7C-RR4*2: ----
R7C-SV4: R7C-EA8, R7C-EA16, R7C-EC8A, R7C-EC16A, R7C-EC8B, R7C-EC16B, R7C-EC8C
R7C-TS4: R7C-EA8, R7C-EA16, R7C-EC8A, R7C-EC16A, R7C-EC8B, R7C-EC16B, R7C-EC8C
R7C-RS4: R7C-EA8, R7C-EA16, R7C-EC8A, R7C-EC16A, R7C-EC8B, R7C-EC16B, R7C-EC8C
R7C-RT4A: R7C-EA8, R7C-EA16, R7C-EC8A, R7C-EC16A, R7C-EC8B, R7C-EC16B, R7C-EC8C
R7C-MS4: R7C-EA8, R7C-EA16, R7C-EC8A, R7C-EC16A, R7C-EC8B, R7C-EC16B, R7C-EC8C
R7C-CT4E: R7C-EA8, R7C-EA16, R7C-EC8A, R7C-EC16A, R7C-EC8B, R7C-EC16B, R7C-EC8C
R7C-PA8: R7C-EA8, R7C-EA16, R7C-EC8A, R7C-EC16A, R7C-EC8B, R7C-EC16B, R7C-EC8C
R7C-DS4N: R7C-EA8, R7C-EA16, R7C-EC8A, R7C-EC16A, R7C-EC8B, R7C-EC16B, R7C-EC8C
R7C-YV2: R7C-EA8, R7C-EA16, R7C-EC8A, R7C-EC16A, R7C-EC8B, R7C-EC16B, R7C-EC8C
R7C-YV4*2: ----
R7C-YS2: R7C-EA8, R7C-EA16, R7C-EC8A, R7C-EC16A, R7C-EC8B, R7C-EC16B, R7C-EC8C
R7C-YS4*2: ----

*1. Not usable with R7C-EA8 or R7C-EA16.
*2. Not usable with 'Extension' modules.

■ OUTPUT AT THE LOSS OF COMMUNICATION

• For the extension module R7C-DA16, R7C-DC16x or R7C-DC8E

The extension modules (R7C-EC8A, R7C-EC16A, R7C-EC8B, R7C-EC16B, R7C-EC8C) are set to 'Reset Output' or 'Hold Output' according to the setting of SW1-5 of the module.

• For the extension module other than R7C-DA16, R7C-DC16x or R7C-DC8E

The extension module is set to 'Hold Output' by factory default setting. The PC Configurator software is used to change the setting to 'Reset Output.'

■ CONNECTING THE EXTENSION MODULE

1) Remove the extension connector cover located at the side of the basic module.
2) Connect the extension module.

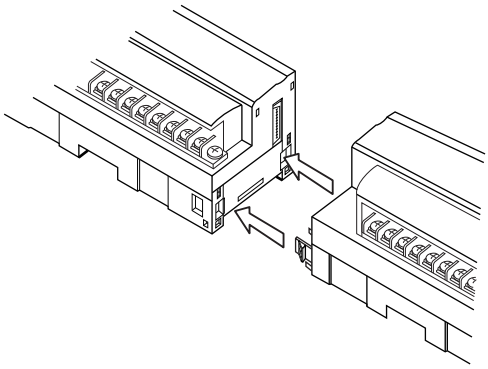

3) Mount the combined module on a DIN rail.

EXTERNAL DIMENSIONS unit: mm [inch]

■ BASIC MODULE

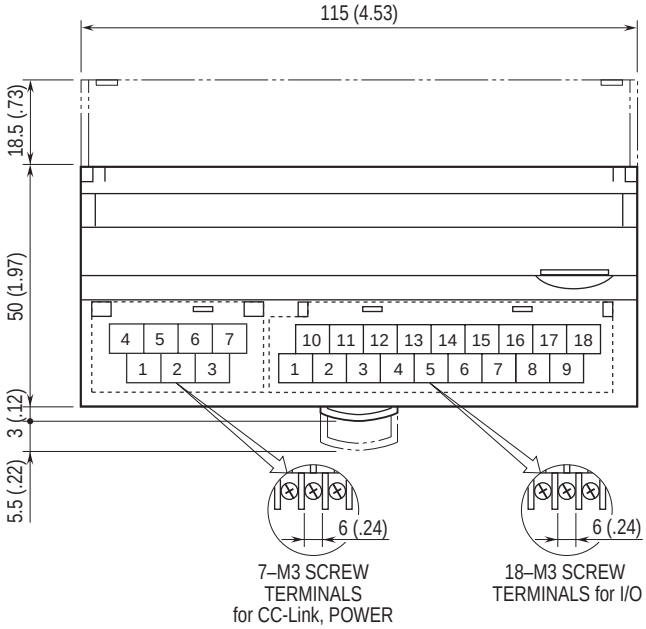

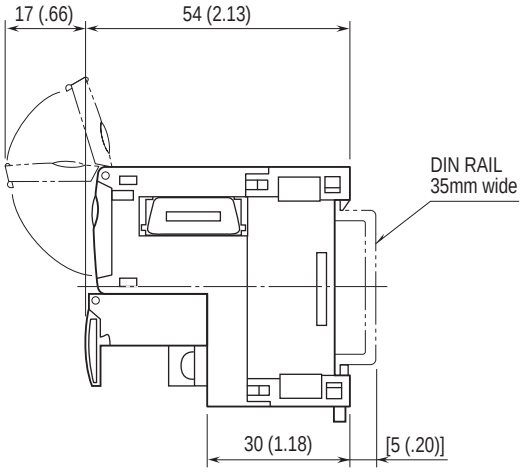

• R7C-TS4

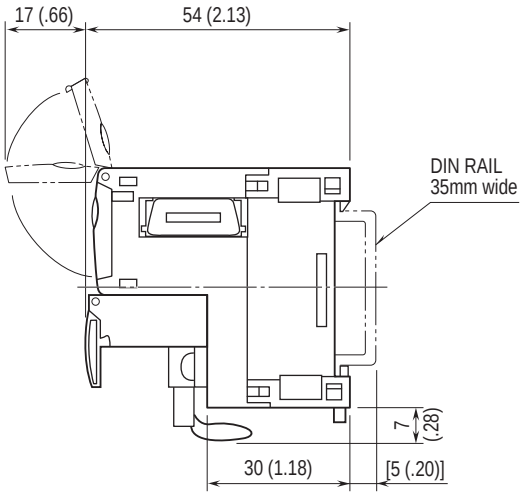

■ **BASIC MODULE, ANALOG OUTPUT, R7C-RR4**

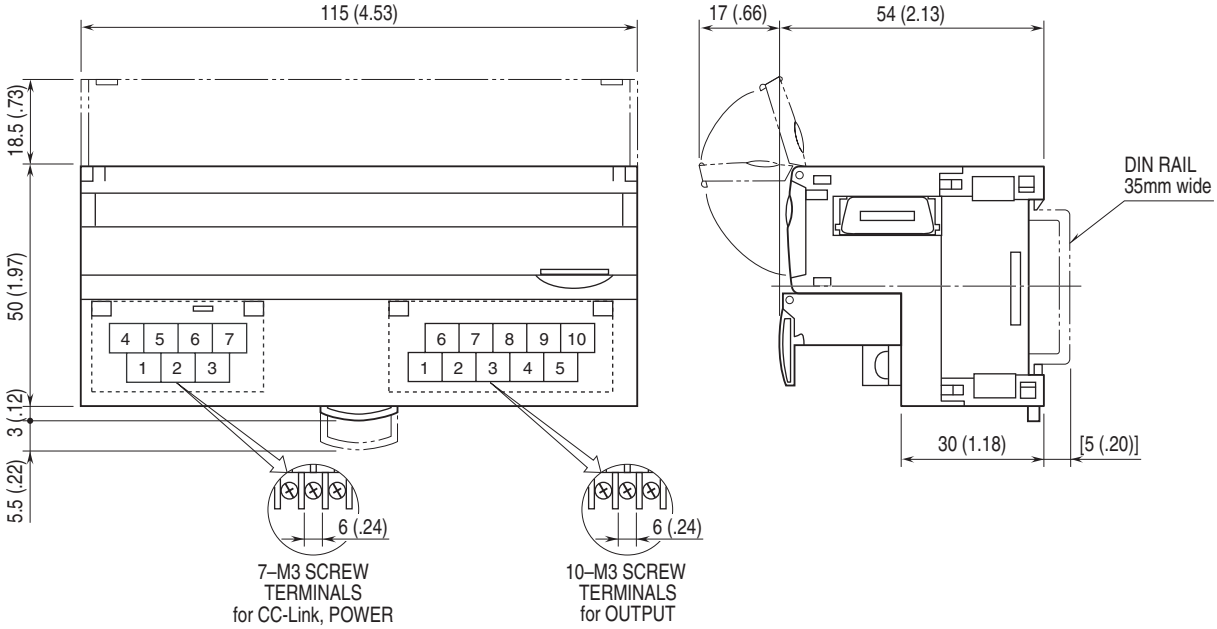

■ **EXTENSION MODULE (R7C-EA8, R7C-EC8A, R7C-EC8B)**

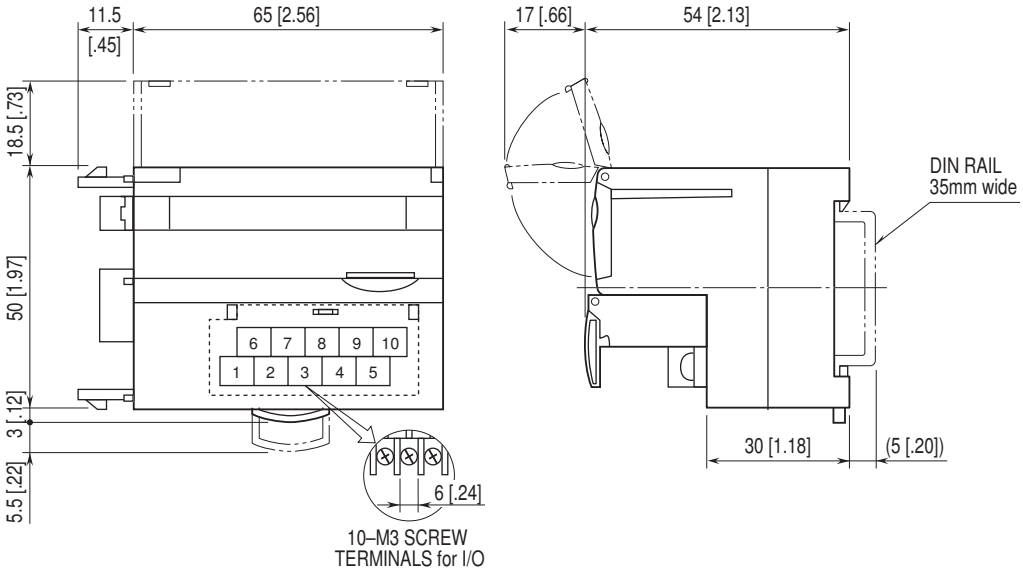

■ **EXTENSION MODULE (R7C-EA16, R7C-EC16A, R7C-EC16B, R7C-EC8C)**

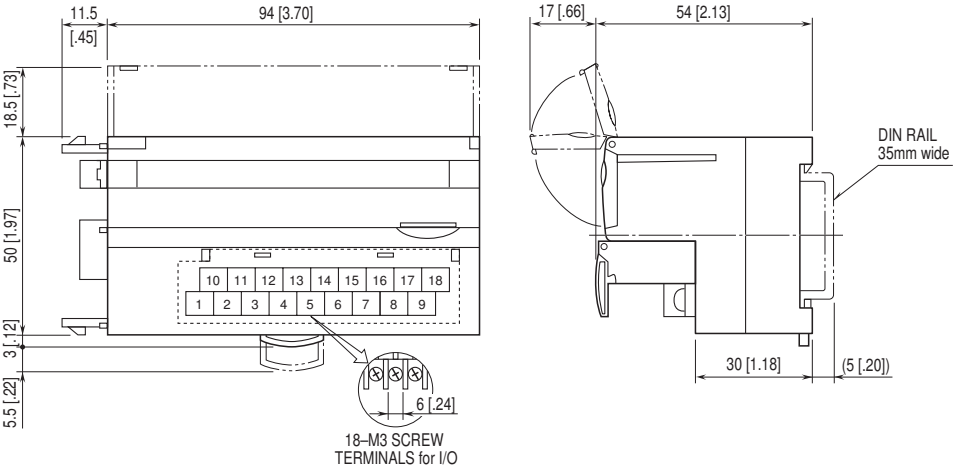

MG CO., LTD.
www.mgco.jp

DISCRETE INPUT MODULE, 16 points

MODEL: R7C-DA16

SPECIFICATIONS

Common: Positive or negative common (NPN/PNP) per 16 points
Number of I/O: Input, 16 points
Maximum inputs applicable at once: No limit (at 24 V DC)
Input status indicator: LED turns ON with contact ON
Isolation: Input to power input to CC-Link or FG
CC-Link: Conforms to Version 1.10
Station type: Remote I/O
Data allocation: 1
Rated input voltage: 24 V DC ±10 %; ripple 5 %p-p max.
ON voltage / current: ≥ 15 V DC (input – COM) / ≥ 3.5 mA
OFF voltage / current: ≤ 5 V DC (input – COM) / ≤ 1 mA
Input current: ≤ 5.5 mA per point at 24 V DC
Input resistance: Approx. 4.4 kΩ
ON delay: ≤ 2.0 msec.
OFF delay: ≤ 2.0 msec.

OPERATING MODE SETTING

(*) Factory setting
Note: Be sure to set unused SW1-6 through 1-8 to OFF.

• Output at the Loss of Communication (SW1-5)

SW1-5	Output at the loss of communication
OFF	Reset the output (turned off)
ON	Hold the output (*) (maintains the last data received normally)

• Extension (SW1-1, 1-2, 1-3, 1-4)

SW1-1	SW1-2	SW1-3	SW1-4	Extension
ON	OFF	OFF	OFF	No extension (*)
ON	OFF	OFF	ON	Discrete input, 8 or 16 points
OFF	OFF	OFF	ON	Discrete output, 8 or 16 points

TERMINAL ASSIGNMENTS

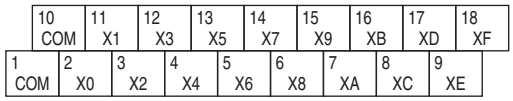

NO.	ID	FUNCTION	NO.	ID	FUNCTION
1	COM	Common	10	COM	Common
2	X0	Input 0	11	X1	Input 1
3	X2	Input 2	12	X3	Input 3
4	X4	Input 4	13	X5	Input 5
5	X6	Input 6	14	X7	Input 7
6	X8	Input 8	15	X9	Input 9
7	XA	Input 10	16	XB	Input 11
8	XC	Input 12	17	XD	Input 13
9	XE	Input 14	18	XF	Input 15

CIRCUIT DIAGRAM

Note: In order to improve EMC performance, bond the FG terminal to ground.
Caution: FG terminal is NOT a protective conductor terminal.

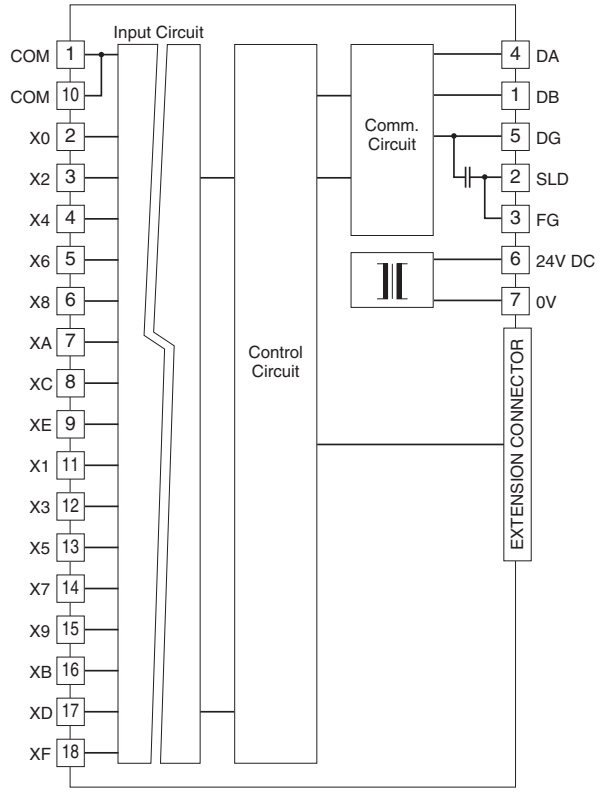

■ **Input Circuit**

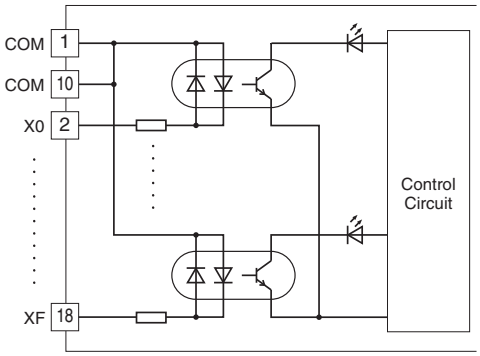

■ **Input Connection Examples**

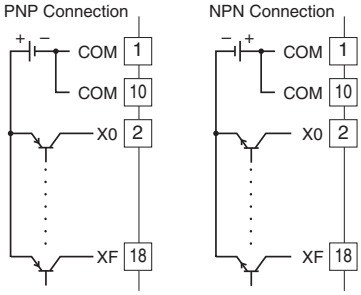

NPN TRANSISTOR OUTPUT MODULE, 16 points

MODEL: R7C-DC16A

SPECIFICATIONS

Common: Negative common (NPN) per 16 points
Number of I/O: Output, 16 points
Maximum outputs applicable at once: No limit (at 24 V DC)
Output status indicator: LED turns ON with contact ON
Isolation: Output to power input to CC-Link or FG
CC-Link: Conforms to Version 1.10
Station type: Remote I/O
Data allocation: 1
Rated load voltage: 24 V DC ±10 %
Rated output current: 0.25 A per point, 2.0 A per common
Residual voltage: ≤ 1.2 V
Leakage current: ≤ 0.1 mA
ON delay: ≤ 0.5 msec.
OFF delay: ≤ 1.5 msec.
(When driving an inductive load, connect a diode in parallel with the load.)

OPERATING MODE SETTING

(*) Factory setting
Note: Be sure to set unused SW1-6 through 1-8 to OFF.

• Output at the Loss of Communication (SW1-5)

SW1-5	Output at the loss of communication
OFF	Reset the output (turned off)
ON	Hold the output (*) (maintains the last data received normally)

• Extension (SW1-1, 1-2, 1-3, 1-4)

SW1-1	SW1-2	SW1-3	SW1-4	Extension
OFF	ON	OFF	OFF	No extension (*)
OFF	ON	OFF	ON	Discrete output, 8 or 16 points

TERMINAL ASSIGNMENTS

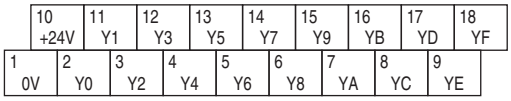

NO.	ID	FUNCTION	NO.	ID	FUNCTION
1	0 V	0 V (common)	10	+24 V	24 V DC
2	Y0	Output 0	11	Y1	Output 1
3	Y2	Output 2	12	Y3	Output 3
4	Y4	Output 4	13	Y5	Output 5
5	Y6	Output 6	14	Y7	Output 7
6	Y8	Output 8	15	Y9	Output 9
7	YA	Output 10	16	YB	Output 11
8	YC	Output 12	17	YD	Output 13
9	YE	Output 14	18	YF	Output 15

CIRCUIT DIAGRAM

Note: In order to improve EMC performance, bond the FG terminal to ground.
Caution: FG terminal is NOT a protective conductor terminal.

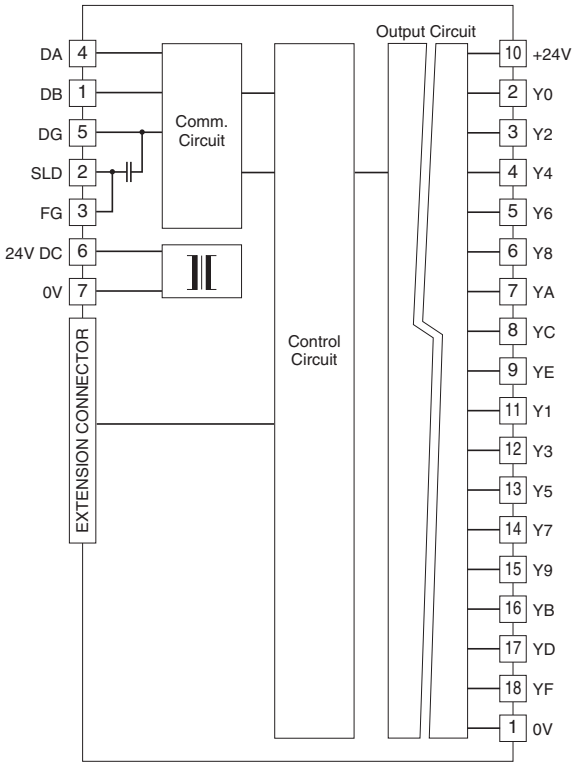

■ **Output Circuit**

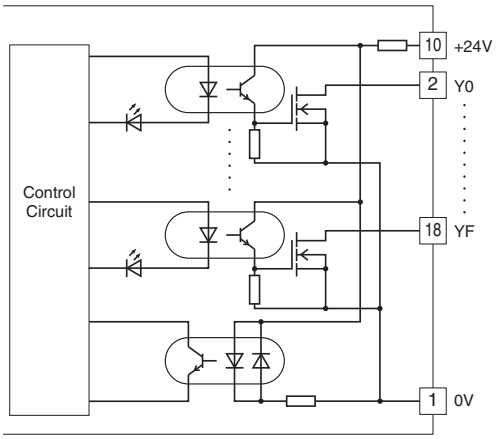

■ **Output Connection Example**

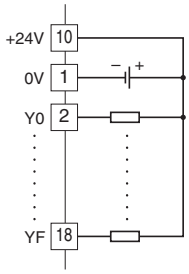

MG CO., LTD.
www.mgco.jp

PNP TRANSISTOR OUTPUT MODULE, 16 points

MODEL: R7C-DC16B

SPECIFICATIONS

Common: Positive common (PNP) per 16 points
Number of I/O: Output, 16 points
Maximum outputs applicable at once: No limit (at 24 V DC)
Output status indicator: LED turns ON with contact ON
Isolation: Output to power input to CC-Link or FG
CC-Link: Conforms to Version 1.10
Station type: Remote I/O
Data allocation: 1
Rated load voltage: 24 V DC ±10 %
Rated output current: 0.25 A per point, 2.0 A per common
Residual voltage: ≤ 1.2 V
Leakage current: ≤ 0.1 mA
ON delay: ≤ 0.5 msec.
OFF delay: ≤ 1.5 msec.
(When driving an inductive load, connect a diode in parallel with the load.)

OPERATING MODE SETTING

(*) Factory setting
Note: Be sure to set unused SW1-6 through 1-8 to OFF.

• Output at the Loss of Communication (SW1-5)

SW1-5	Output at the loss of communication
OFF	Reset the output (turned off)
ON	Hold the output (*) (maintains the last data received normally)

• Extension (SW1-1, 1-2, 1-3, 1-4)

SW1-1	SW1-2	SW1-3	SW1-4	Extension
OFF	ON	OFF	OFF	No extension (*)
OFF	ON	OFF	ON	Discrete output, 8 or 16 points

TERMINAL ASSIGNMENTS

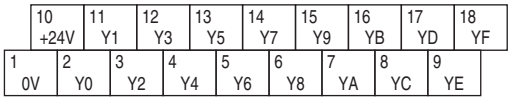

NO.	ID	FUNCTION	NO.	ID	FUNCTION
1	0 V	0 V	10	+24 V	24 V DC (common)
2	Y0	Output 0	11	Y1	Output 1
3	Y2	Output 2	12	Y3	Output 3
4	Y4	Output 4	13	Y5	Output 5
5	Y6	Output 6	14	Y7	Output 7
6	Y8	Output 8	15	Y9	Output 9
7	YA	Output 10	16	YB	Output 11
8	YC	Output 12	17	YD	Output 13
9	YE	Output 14	18	YF	Output 15

CIRCUIT DIAGRAM

Note: In order to improve EMC performance, bond the FG terminal to ground.
Caution: FG terminal is NOT a protective conductor terminal.

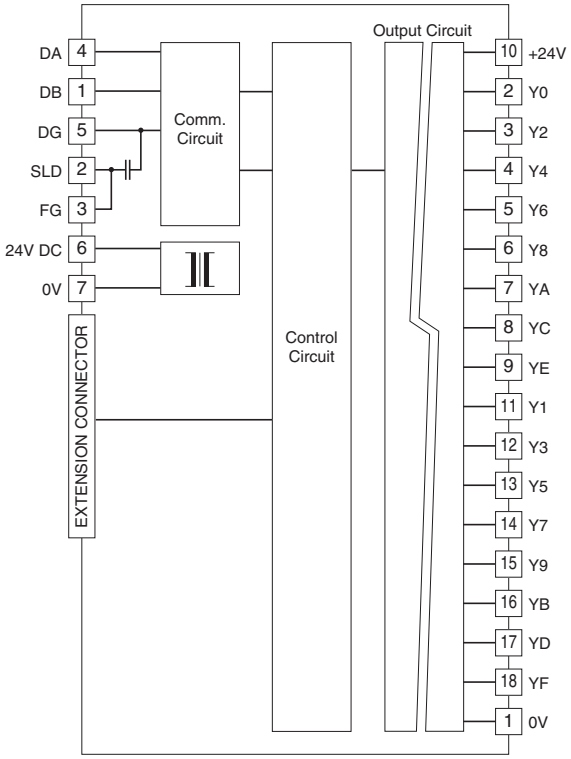

■ **Output Circuit**

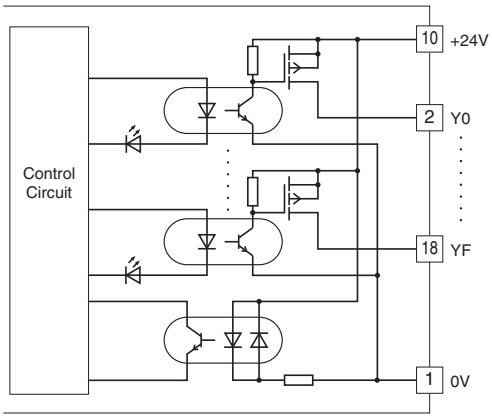

■ **Output Connection Example**

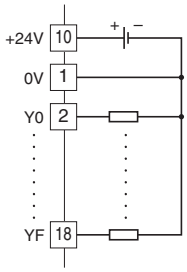

MG CO., LTD.
www.mgco.jp

RELAY CONTACT OUTPUT MODULE, 8 points

MODEL: R7C-DC8C

SPECIFICATIONS

Common: 1 common per 4 points (4 terminals)
Common current: Max. 8 A (4 terminals)
Number of I/O: Relay contact output, 8 points
Maximum outputs applicable at once: No limit (at 24 V DC)
Output status indicator: LED turns ON with contact ON
Isolation: Output to power input to CC-Link or FG
CC-Link: Conforms to Version 1.10
Station type: Remote I/O
Data allocation: 1
Relay driving power: 24 V DC ±10 %, ≥ 60 mA
Rated load: 250 V AC* @2 A (cos ø = 1)
30 V DC @2 A (resistive load)
Electrical life 10^5 cycles (rate 30/min.)
*When it is used as a product relevant to EU directive, it should be used under the Installation Category I, 125 V AC or less.
Maximum switching voltage: 250 V AC or 30 V DC
Maximum switching power: 500 VA or 60 W
Minimum load: 24 V DC @5 mA
Mechanical life: 2×10^7 cycles (rate 300/min.)
When driving an inductive load, external contact protection and noise quenching are recommended.
ON delay: ≤ 10 msec.
OFF delay: ≤ 10 msec.

OPERATING MODE SETTING

(*) Factory setting
Note: Be sure to set unused SW1-1 through 1-3 and 1-5 through 1-8 to OFF.

• Output at the Loss of Communication (SW1-4)

SW1-4	Output at the loss of communication
OFF	Reset the output (turned off)
ON	Hold the output (*) (maintains the last data received normally)

TERMINAL ASSIGNMENTS

NO.	ID	FUNCTION	NO.	ID	FUNCTION
1	0V	0 V	10	+24V	24 V DC
2	COM0	Common 0	11	Y0	Output 0
3	COM0	Common 0	12	Y1	Output 1
4	COM0	Common 0	13	Y2	Output 2
5	COM0	Common 0	14	Y3	Output 3
6	COM1	Common 1	15	Y4	Output 4
7	COM1	Common 1	16	Y5	Output 5
8	COM1	Common 1	17	Y6	Output 6
9	COM1	Common 1	18	Y7	Output 7

MG CO., LTD.
www.mgco.jp

CIRCUIT DIAGRAM

Note: In order to improve EMC performance, bond the FG terminal to ground.
Caution: FG terminal is NOT a protective conductor terminal.

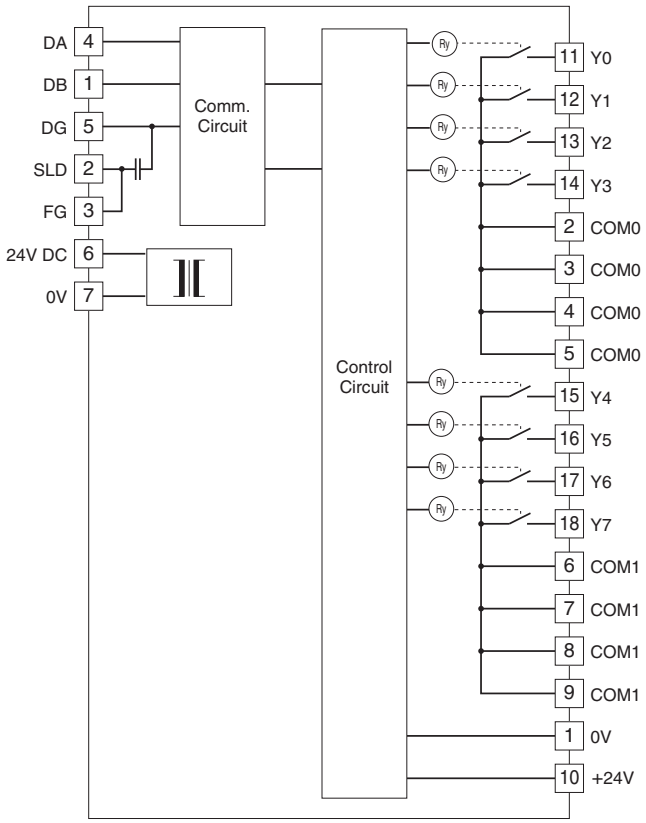

■ **Output Connection Example**

4 points / common

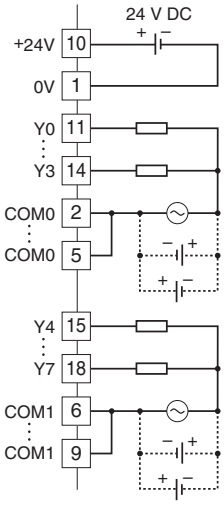

8 points / common

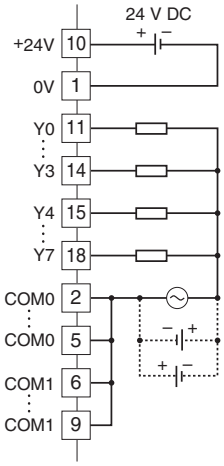

MG CO., LTD.
www.mgco.jp

RELAY CONTACT OUTPUT MODULE, 8 points

MODEL: R7C-DC8E

SPECIFICATIONS

Common: 1 common per 4 points (4 terminals)
Common current: Max. 8 A (4 terminals)
Number of I/O: Relay contact output, 8 points
Maximum outputs applicable at once: No limit (at 24 V DC)
Output status indicator: LED turns ON with contact ON
Isolation: Output to power input to CC-Link or FG
CC-Link: Conforms to Version 1.10
Station type: Remote I/O
Data allocation: 1
Relay driving power: 24 V DC ±10 %, ≥ 60 mA
Rated load: 250 V AC @2 A (cos ø = 1)
30 V DC @2 A (resistive load)
Electrical life 10^5 cycles (rate 30/min.)
Maximum switching voltage: 250 V AC or 30 V DC
Maximum switching power: 500 VA or 60 W
Minimum load: 24 V DC @5 mA
Mechanical life: 2×10^7 cycles (rate 300/min.)
When driving an inductive load, external contact protection and noise quenching are recommended.
ON delay: ≤ 10 msec.
OFF delay: ≤ 10 msec.

OPERATING MODE SETTING

(*) Factory setting
Note: Be sure to set unused SW1-6 through 1-8 to OFF.

• Output at the Loss of Communication (SW1-5)

SW1-5	Output at the loss of communication
OFF	Reset the output (turned off)
ON	Hold the output (*) (maintains the last data received normally)

• Extension (SW1-1, 1-2, 1-3, 1-4)

SW1-1	SW1-2	SW1-3	SW1-4	Extension
OFF	ON	OFF	OFF	No extension (*)
OFF	ON	OFF	ON	Discrete output, 8 or 16 points

TERMINAL ASSIGNMENTS

NO.	ID	FUNCTION	NO.	ID	FUNCTION
1	0V	0 V	10	+24V	24 V DC
2	COM0	Common 0	11	Y0	Output 0
3	COM0	Common 0	12	Y1	Output 1
4	COM0	Common 0	13	Y2	Output 2
5	COM0	Common 0	14	Y3	Output 3
6	COM1	Common 1	15	Y4	Output 4
7	COM1	Common 1	16	Y5	Output 5
8	COM1	Common 1	17	Y6	Output 6
9	COM1	Common 1	18	Y7	Output 7

MG CO., LTD.
www.mgco.jp

CIRCUIT DIAGRAM

Caution: FG terminal is NOT a protective conductor terminal.

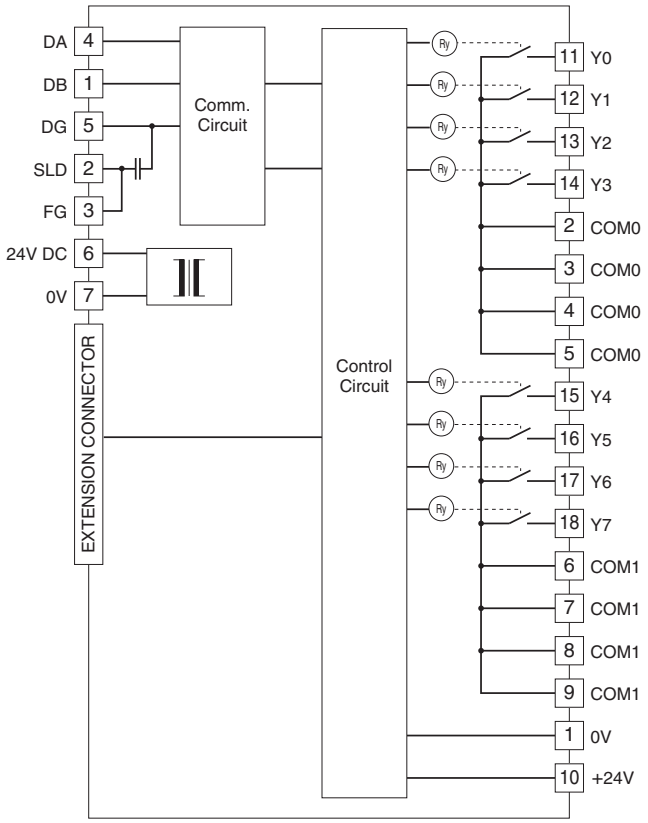

■ **Output Connection Example**

4 points / common

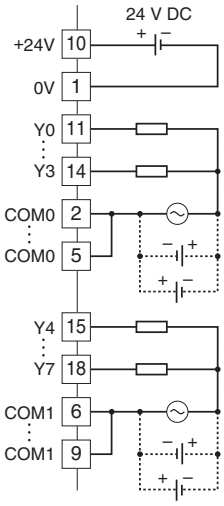

8 points / common

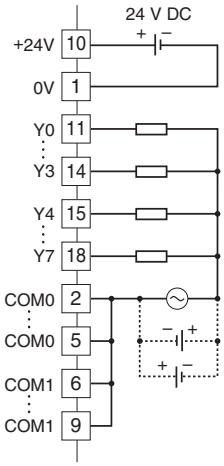

MG CO., LTD.
www.mgco.jp

REMOTE CONTROL RELAY CONTROL MODULE

MODEL: R7C-RR4

RECOMMENDED PRODUCTS (OPERATION CHECKED)

Remote control relay:
BR-12D, BR-22D (Mitsubishi Electric)
WR6165 (Panasonic)
Remote control transformer:
BRT-10B, BRT-20B (Mitsubishi Electric)
WR2301 (Panasonic)

SPECIFICATIONS

Common: 1 common per 4 points (4 terminals)
Number of I/O: Output, 4 points
Maximum outputs applicable at once: No limit
I/O status indicator: Feedback input status turns on with the input supplied.
Output status LED turns on with the output ON.
Isolation: Output to power input to CC-Link or FG
CC-Link: Conforms to Version 1.10
Station type: Remote I/O
Data allocation: 1
Rated load voltage: 24 V AC ±10 % (supplied by the remote control transformer)
Load voltage frequency: 50 / 60 Hz

OPERATING MODE SETTING

Each output is set with 2 bits. Output setting is explained on the table below.

NO.	BIT	SETTING	FUNCTION
Output 0	8, 9	0, 0	No operation
		1, 0	Output 0 ON
		0, 1	Output 0 OFF
		1, 1	Invalid
Output 1	10, 11	0, 0	No operation
		1, 0	Output 1 ON
		0, 1	Output 1 OFF
		1, 1	Invalid
Output 2	12, 13	0, 0	No operation
		1, 0	Output 2 ON
		0, 1	Output 2 OFF
		1, 1	Invalid
Output 3	14, 15	0, 0	No operation
		1, 0	Output 3 ON
		0, 1	Output 3 OFF
		1, 1	Invalid

Do not set both bits 1. If the 2 bits are simultaneously 1, the module will not operate normally.
For repeating the output of ON pulse, after setting (0, 0), set (1, 0) once again.

TERMINAL ASSIGNMENTS

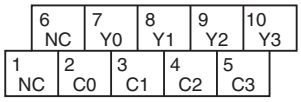

NO.	ID	FUNCTION	NO.	ID	FUNCTION
1	NC	No connection	6	NC	No connection
2	C0	Common 0	7	Y0	Output 0
3	C1	Common 1	8	Y1	Output 1
4	C2	Common 2	9	Y2	Output 2
5	C3	Common 3	10	Y3	Output 3

CIRCUIT DIAGRAM

Caution: FG terminal is NOT a protective conductor terminal.

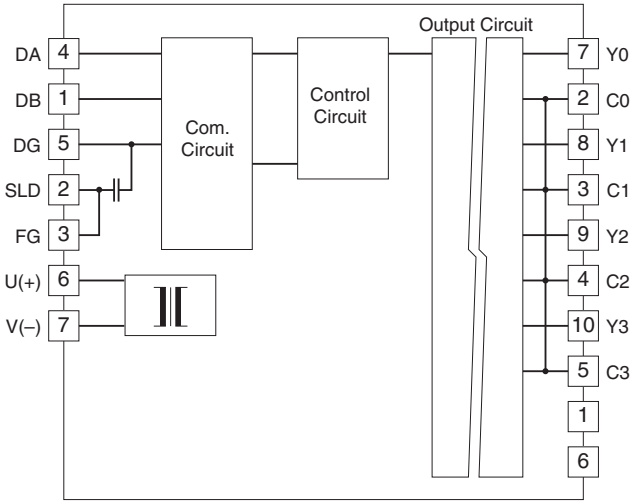

■ **Output Connection Example**

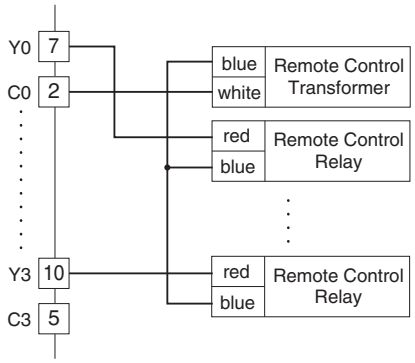

MG CO., LTD.
www.mgco.jp

DC VOLTAGE/CURRENT INPUT MODULE, 4 points

MODEL: R7C-SV4

SPECIFICATIONS

Isolation: Input 0 to input 1 to input 2 to input 3 to power input to CC-Link or FG
CC-Link: Conforms to Version 1.10
Station type: Remote device
Data allocation: 1
Converted data range: 0 – 10000 of the input range
• Input range
Wide span voltage: -10 – +10 V DC, -5 – +5 V DC, 0 – 10 V DC, 0 – 5 V DC, 1 – 5 V DC
Narrow span voltage: -1 – +1 V DC, 0 – 1 V DC, -0.5 – +0.5 V DC
Current range: -20 – +20 mA DC, 0 – 20 mA DC, 4 – 20 mA DC
• Input resistance
Wide span voltage: ≥ 1 MΩ
Narrow span voltage: ≥ 100 kΩ
Current range: 70 Ω
Conversion rate / conversion accuracy: 10 msec./±0.8 %, 20 msec./±0.4 %, 40 msec./±0.2 %, 80 msec./±0.1 %
Response time: Conversion rate × 2 + 50 msec. (0 – 90 %)
Temperature coefficient: ±0.015 %/°C (±0.008 %/°F)

OPERATING MODE SETTING

(*) Factory setting

• Input Range (SW1-5, 1-6, 1-7, 1-8)

SW1-5	SW1-6	SW1-7	SW1-8	Input range
OFF	OFF	OFF	OFF	-10 – +10 V DC (*)
ON	OFF	OFF	OFF	-5 – +5 V DC
OFF	ON	OFF	OFF	-1 – +1 V DC
ON	ON	OFF	OFF	0 – 10 V DC
OFF	OFF	ON	OFF	0 – 5 V DC
ON	OFF	ON	OFF	1 – 5 V DC
OFF	ON	ON	OFF	0 – 1V DC
ON	ON	ON	OFF	-0.5 – +0.5 V DC
ON	OFF	OFF	ON	-20 – +20 mA DC
OFF	ON	OFF	ON	4 – 20 mA DC
ON	ON	OFF	ON	0 – 20 mA DC
ON	ON	ON	ON	PC Configurator setting

• Conversion Rate / Accuracy (SW1-3, 1-4)

SW1-3	SW1-4	Conversion rate / Accuracy
OFF	OFF	80 msec. / ±0.1% (*)
ON	OFF	40 msec. / ±0.2%
OFF	ON	20 msec. / ±0.4%
ON	ON	10 msec. / ±0.8%

• Extension (SW1-1, 1-2)

SW1-1	SW1-2	Extension
OFF	OFF	No extension (*)
ON	OFF	Discrete input, 8 or 16 points
OFF	ON	Discrete output, 8 or 16 points

TERMINAL ASSIGNMENTS

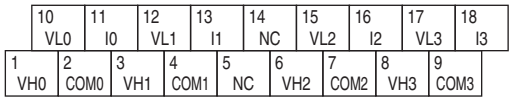

NO.	ID	FUNCTION	NO.	ID	FUNCTION
1	VH0	Wide span volt. 0	10	VL0	Narrow span volt. 0
2	COM0	Common 0	11	I0	Current range 0
3	VH1	Wide span volt. 1	12	VL1	Narrow span volt. 1
4	COM1	Common 1	13	I1	Current range 1
5	NC	No connection	14	NC	No connection
6	VH2	Wide span volt. 2	15	VL2	Narrow span volt. 2
7	COM2	Common 2	16	I2	Current range 2
8	VH3	Wide span volt. 3	17	VL3	Narrow span volt. 3
9	COM3	Common 3	18	I3	Current range 3

MG CO., LTD.
www.mgco.jp

CIRCUIT DIAGRAM

Note: In order to improve EMC performance, bond the FG terminal to ground.
Caution: FG terminal is NOT a protective conductor terminal.

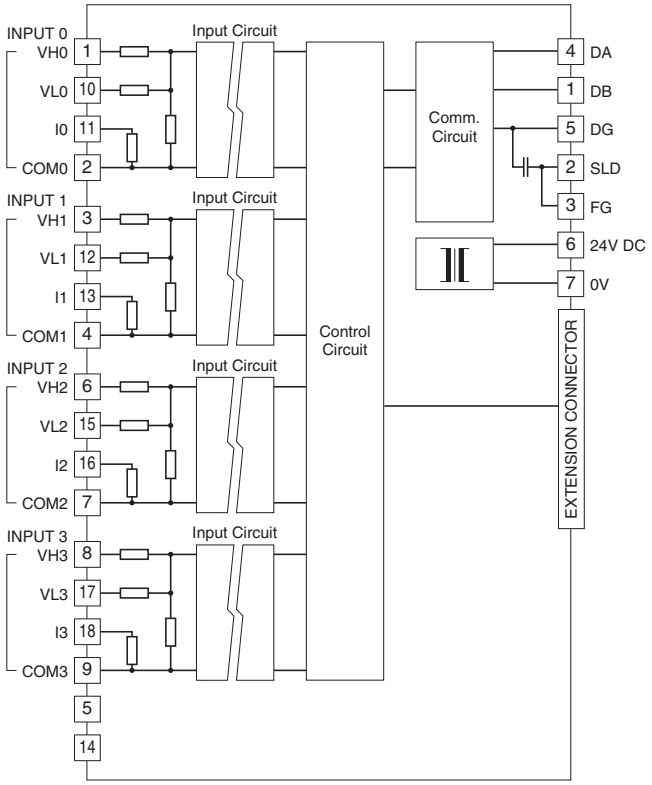

■ **Input Connection Examples**

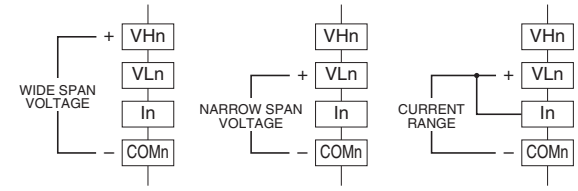

Be sure to close across VLn and In terminals for a current input.

THERMOCOUPLE INPUT MODULE, 4 points

MODEL: R7C-TS4

SPECIFICATIONS

Isolation: Input 0 to input 1 to input 2 to input 3 to power input to CC-Link or FG
CC-Link: Conforms to Version 1.10
Station type: Remote device
Data allocation: 1
Converted data range: Engineering unit value (°C, K) × 10 (integer); No multiplication for °F
Linearization: Standard
Thermocouple: K, E, J, T, B, R, S, C, N, U, L, P, PR
Cold junction compensation: CJC sensor attached to the input terminals
Input resistance: ≥ 30 kΩ
Burnout sensing: ≤ 0.1 µA
Conversion accuracy: ±1°C (±1.8°F);
±2.0°C (±3.6°F) for B, R, S, C, PR
Conversion rate: 250 msec. or 500 msec.
Response time: Conversion rate × 2 + 50 msec. (0 – 90 %)
Temperature coefficient: ±0.015 %/°C (±0.008 %/°F) of max. span
CJC error: ±1.0°C at 25°C ±10°C
(±1.8°F at 77°F ±18°F)
±1.5°C (±2.7°F) for R, S, PR

T/C	BURNOUT INDICATION (°C)		CONFORMANCE RANGE (°C)
	Downscale	Upscale	
K (CA)	-272	+1472	-150 to +1370
E (CRC)	-272	+1120	-170 to +1000
J (IC)	-260	+1300	-180 to +1200
T (CC)	-272	+ 500	-170 to + 400
B (RH)	24	1920	1000 to 1760
R	-100	+1860	380 to 1760
S	-100	+1860	400 to 1760
C (WRe 5-26)	-52	+2416	100 to 2315
N	-272	+1400	-130 to +1300
U	-252	+ 700	-200 to +600
L	-252	+1000	-200 to +900
P (Platinel II)	-52	+1496	0 to 1395
(PR)	-52	+1860	300 to 1760

T/C	BURNOUT INDICATION (°F)		CONFORMANCE RANGE (°F)
	Downscale	Upscale	
K (CA)	-458	+2682	-238 to +2498
E (CRC)	-458	+2048	-274 to +1832
J (IC)	-436	+2372	-292 to +2192
T (CC)	-458	+932	-274 to +752
B (RH)	75	3488	1832 to 3200
R	-148	+3380	716 to 3200
S	-148	+3380	752 to 3200
C (WRe 5-26)	-62	+4381	212 to 4199
N	-458	+2552	-202 to +2372
U	-422	+1292	-328 to +1112
L	-422	+1832	-328 to +1652
P (Platinel II)	-62	+2725	32 to 2543
(PR)	-62	+3380	572 to 3200

OPERATING MODE SETTING

(*) Factory setting

• Thermocouple Type (SW1-5, 1-6, 1-7, 1-8)

SW1-5	SW1-6	SW1-7	SW1-8	Thermocouple type
OFF	OFF	OFF	OFF	K (CA) (*)
ON	OFF	OFF	OFF	E (CRC)
OFF	ON	OFF	OFF	J (IC)
ON	ON	OFF	OFF	T (CC)
OFF	OFF	ON	OFF	B (RH)
ON	OFF	ON	OFF	R
OFF	ON	ON	OFF	S
ON	ON	ON	OFF	C (WRe 5-26)
OFF	OFF	OFF	ON	N
ON	OFF	OFF	ON	U
OFF	ON	OFF	ON	L
ON	ON	OFF	ON	P (Platinel II)
OFF	OFF	ON	ON	(PR)
ON	ON	ON	ON	PC Configurator setting

• Conversion Rate (SW1-3)

SW1-3	Conversion rate
OFF	250 msec. (*)
ON	500 msec.

• Burnout (SW1-4)

SW1-4	Burnout
OFF	Upscale (*)
ON	Downscale

• Extension (SW1-1, 1-2)

SW1-1	SW1-2	Extension
OFF	OFF	No extension (*)
ON	OFF	Discrete input, 8 or 16 points
OFF	ON	Discrete output, 8 or 16 points

TERMINAL ASSIGNMENTS

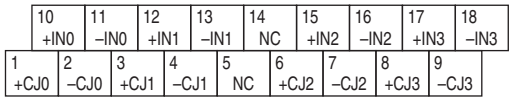

NO.	ID	FUNCTION	NO.	ID	FUNCTION
1	+CJ0	CJC + 0	10	+IN0	T/C + 0
2	–CJ0	CJC – 0	11	–IN0	T/C – 0
3	+CJ1	CJC + 1	12	+IN1	T/C + 1
4	–CJ1	CJC – 1	13	–IN1	T/C – 1
5	NC	No connection	14	NC	No connection
6	+CJ2	CJC + 2	15	+IN2	T/C + 2
7	–CJ2	CJC – 2	16	–IN2	T/C – 2
8	+CJ3	CJC + 3	17	+IN3	T/C + 3
9	–CJ3	CJC – 3	18	–IN3	T/C – 3

MG CO., LTD.
www.mgco.jp

CIRCUIT DIAGRAM

Note: In order to improve EMC performance, bond the FG terminal to ground.
Caution: FG terminal is NOT a protective conductor terminal.

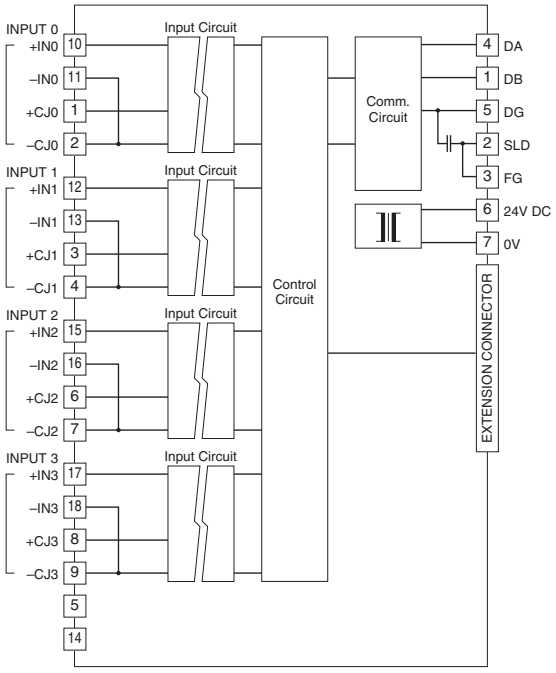

■ **Input Connection Example**

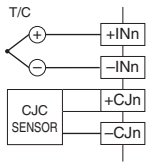

RTD INPUT MODULE, 4 points

MODEL: R7C-RS4

SPECIFICATIONS

Isolation: Input 0 to input 1 to input 2 to input 3 to power input to CC-Link or FG
CC-Link: Conforms to Version 1.10
Station type: Remote device
Data allocation: 1
Converted data range: Engineering unit value (°C, K) × 10 (integer); No multiplication for °F
Linearization: Standard
RTD: Pt 100 (JIS '97, IEC), Pt 100 (JIS '89), JPt 100 (JIS '89), Pt 50 Ω (JIS '81), Ni 100, Cu 10, Cu 50
Sensing current: ≤ 1 mA
Input resistance: ≥ 1 MΩ
Maximum leadwire resistance: 100 Ω per wire
Conversion accuracy: ±1°C (±1.8°F);
±3°C (±5.4°F) for Cu 10
Conversion rate: 250 msec. or 500 msec.
Response time: Conversion rate × 2 + 50 msec. (0 – 90 %)
Temperature coefficient: ±0.015 %/°C (±0.008 %/°F) of max. span except ±0.150 %/°C (±0.08 %/°F) for Cu 10 @ 25°C

RTD	BURNOUT INDICATION (°C)		CONFORMANCE
	Downscale	Upscale	RANGE (°C)
Pt 100 (JIS '97, IEC)	-240	+900	-200 to +850
Pt 100 (JIS '89)	-240	+900	-200 to +660
JPt 100 (JIS '89)	-236	+560	-200 to +510
Pt 50 Ω (JIS '81)	-236	+700	-200 to +649
Ni 100	-100	+252	-80 to +250
Cu 10 @ 25°C	-212	+312	-50 to +250
Cu 50	-100	+200	-50 to +150

RTD	BURNOUT INDICATION (°F)		CONFORMANCE
	Downscale	Upscale	RANGE (°F)
Pt 100 (JIS '97, IEC)	-400	+1652	-328 to +1562
Pt 100 (JIS '89)	-400	+1652	-328 to +1220
JPt 100 (JIS '89)	-393	+1040	-328 to +950
Pt 50 Ω (JIS '81)	-393	+1292	-328 to +1200
Ni 100	-148	+486	-112 to +482
Cu 10 @ 25°C	-350	+594	-58 to +482
Cu 50	-148	+392	-58 to +302

OPERATING MODE SETTING

(*) Factory setting

• RTD Type (SW1-5, 1-6, 1-7, 1-8)

SW1-5	SW1-6	SW1-7	SW1-8	RTD Type
OFF	OFF	OFF	OFF	Pt 100 (JIS '97, IEC) (*)
ON	OFF	OFF	OFF	Pt 100 (JIS '89)
OFF	ON	OFF	OFF	JPt 100 (JIS '89)
ON	ON	OFF	OFF	Pt 50 Ω (JIS '81)
OFF	OFF	ON	OFF	Ni 100
ON	OFF	ON	OFF	Cu 10 @ 25°C
OFF	OFF	OFF	ON	Cu 50
ON	ON	ON	ON	PC Configurator setting

• Conversion Rate (SW1-3)

SW1-3	Conversion rate
OFF	250 msec. (*)
ON	500 msec.

• Burnout (SW1-4)

SW1-4	Burnout
OFF	Upscale (*)
ON	Downscale

• Extension (SW1-1, 1-2)

SW1-1	SW1-2	Extension
OFF	OFF	No extension (*)
ON	OFF	Discrete input, 8 or 16 points
OFF	ON	Discrete output, 8 or 16 points

TERMINAL ASSIGNMENTS

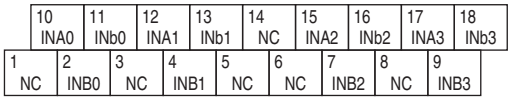

NO.	ID	FUNCTION	NO.	ID	FUNCTION
1	NC	No connection	10	INA0	RTD 0-A
2	INB0	RTD 0-B	11	INb0	RTD 0-b
3	NC	No connection	12	INA1	RTD 1-A
4	INB1	RTD 1-B	13	INb1	RTD 1-b
5	NC	No connection	14	NC	No connection
6	NC	No connection	15	INA2	RTD 2-A
7	INB2	RTD 2-B	16	INb2	RTD 2-b
8	NC	No connection	17	INA3	RTD 3-A
9	INB3	RTD 3-B	18	INb3	RTD 3-b

MG CO., LTD.
www.mgco.jp

CIRCUIT DIAGRAM

Note: In order to improve EMC performance, bond the FG terminal to ground.
Caution: FG terminal is NOT a protective conductor terminal.

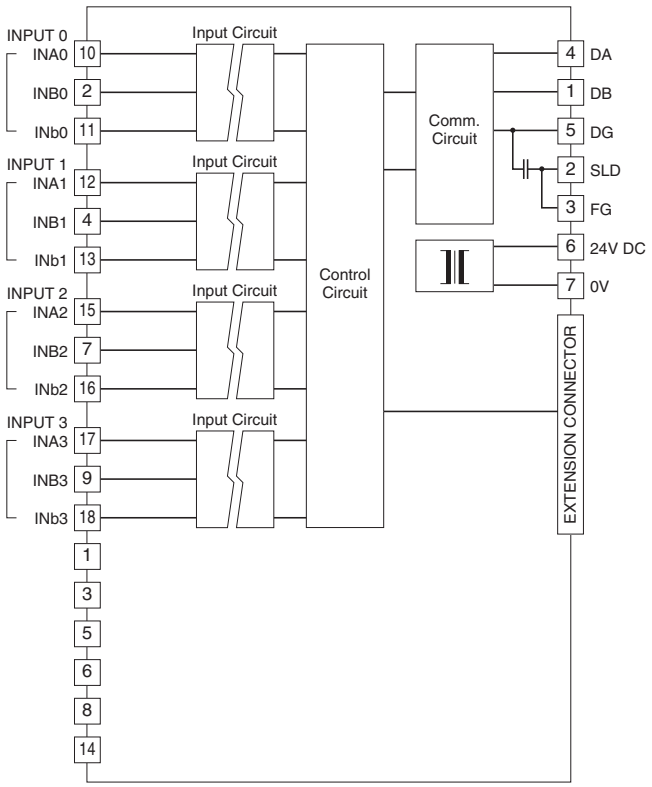

■ **Input Connection Example**

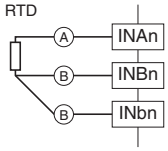

THERMISTOR INPUT MODULE, 4 points

MODEL: R7C-RT4A

SPECIFICATIONS

Isolation: Input 0 to input 1 to input 2 to input 3 to power input to CC-Link or FG
CC-Link: Conforms to Version 1.10
Station type: Remote device
Data allocation: 1
Converted data range: Engineering unit value (°C, K) × 10 (integer); No multiplication for °F
Thermistor: 502AT-11/502AT-2 (SEMITEC Corporation)
Excitation: Approx. 4.5 V DC (sensing resistance 15.8 kΩ)
Input resistance: ≥ 1 MΩ
Burnout response time: ≤ 2 sec.
Conversion accuracy: ±0.5°C (±0.9°F)
Conversion rate: 250 msec. or 500 msec.
Response time: Conversion rate × 2 + 50 msec. (0 – 90 %)
Temperature coefficient: ±0.15 %/°C (±0.08 %/°F)

THERMISTOR		BURNOUT INDICATION		CONFORMANCE RANGE
		Downscale	Upscale	
502AT-11 502AT-2	(°C)	-50	+110	-40 to +90
	(°F)	-58	+230	-40 to +194

OPERATING MODE SETTING

(*) Factory setting
Note: Be sure to set unused SW1-5 through 1-8 to OFF.

• Conversion Rate (SW1-3)

SW1-3	Conversion rate
OFF	250 msec. (*)
ON	500 msec.

• Burnout (SW1-4)

SW1-4	Burnout
OFF	Upscale (*)
ON	Downscale

• Extension (SW1-1, 1-2)

SW1-1	SW1-2	Extension
OFF	OFF	No extension (*)
ON	OFF	Discrete input, 8 or 16 points
OFF	ON	Discrete output, 8 or 16 points

TERMINAL ASSIGNMENTS

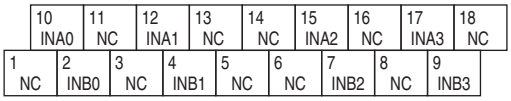

NO.	ID	FUNCTION	NO.	ID	FUNCTION
1	NC	No connection	10	INA0	Thermistor 0-A
2	INB0	Thermistor 0-B	11	NC	No connection
3	NC	No connection	12	INA1	Thermistor 1-A
4	INB1	Thermistor 1-B	13	NC	No connection
5	NC	No connection	14	NC	No connection
6	NC	No connection	15	INA2	Thermistor 2-A
7	INB2	Thermistor 2-B	16	NC	No connection
8	NC	No connection	17	INA3	Thermistor 3-A
9	INB3	Thermistor 3-B	18	NC	No connection

CIRCUIT DIAGRAM

Caution: FG terminal is NOT a protective conductor terminal.

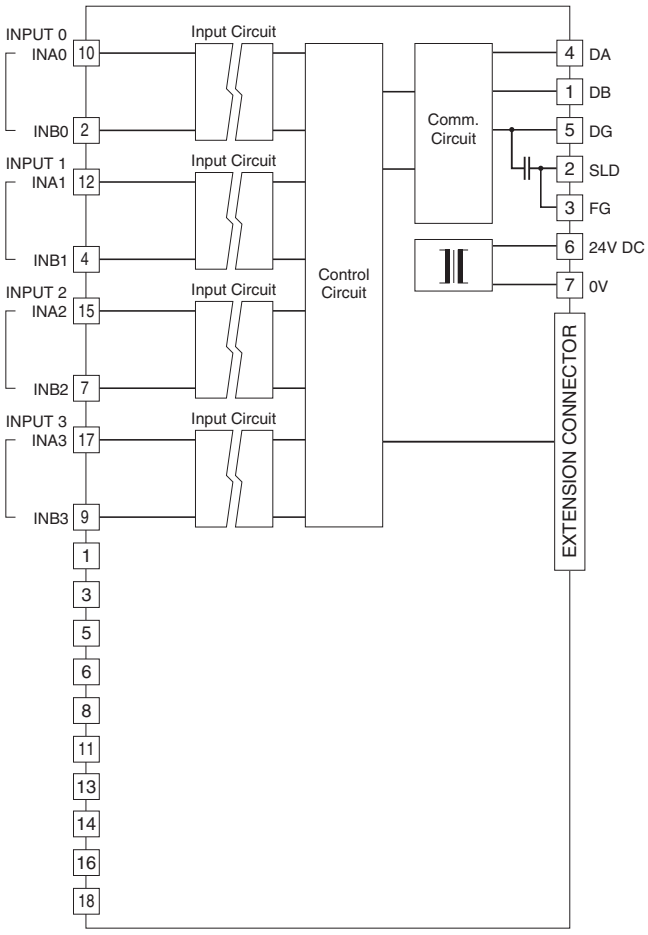

■ **Input Connection Example**

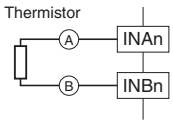

MG CO., LTD.
www.mgco.jp

POTENTIOMETER INPUT MODULE, 4 points

MODEL: R7C-MS4

SPECIFICATIONS

Isolation: Input 0 to input 1 to input 2 to input 3 to power input to CC-Link or FG
CC-Link: Conforms to Version 1.10
Station type: Remote device
Data allocation: 1
Converted data range: 0 – 10000 of the input range
Potentiometer: Total resistance 100 Ω – 20 kΩ
Minimum span: 50 % of total resistance
Excitation: Approx. 0.2 V DC
Conversion rate / conversion accuracy:
10 msec./±0.8 %, 20 msec./±0.4 %, 40 msec./±0.2 %, 80 msec./±0.1 %
Response time: Conversion rate × 2 + 50 msec. (0 – 90 %)
Temperature coefficient: ±0.015 %/°C (±0.008 %/°F)

OPERATING MODE SETTING

(*) Factory setting
Note: Be sure to set unused SW1-5 through 1-8 to OFF.

• Conversion Rate / Accuracy (SW1-3, 1-4)

SW1-3	SW1-4	Conversion rate / Accuracy
OFF	OFF	80 msec. / ±0.1% (*)
ON	OFF	40 msec. / ±0.2%
OFF	ON	20 msec. / ±0.4%
ON	ON	10 msec. / ±0.8%

• Extension (SW1-1, 1-2)

SW1-1	SW1-2	Extension
OFF	OFF	No extension (*)
ON	OFF	Discrete input, 8 or 16 points
OFF	ON	Discrete output, 8 or 16 points

TERMINAL ASSIGNMENTS

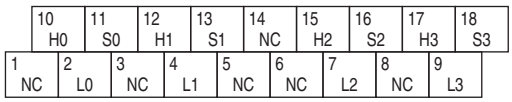

NO.	ID	FUNCTION	NO.	ID	FUNCTION
1	NC	No connection	10	H0	Pot H0
2	L0	Pot L0	11	S0	Pot S0
3	NC	No connection	12	H1	Pot H1
4	L1	Pot L1	13	S1	Pot S1
5	NC	No connection	14	NC	No connection
6	NC	No connection	15	H2	Pot H2
7	L2	Pot L2	16	S2	Pot S2
8	NC	No connection	17	H3	Pot H3
9	L3	Pot L3	18	S3	Pot S3

CIRCUIT DIAGRAM

Note: In order to improve EMC performance, bond the FG terminal to ground.
Caution: FG terminal is NOT a protective conductor terminal.

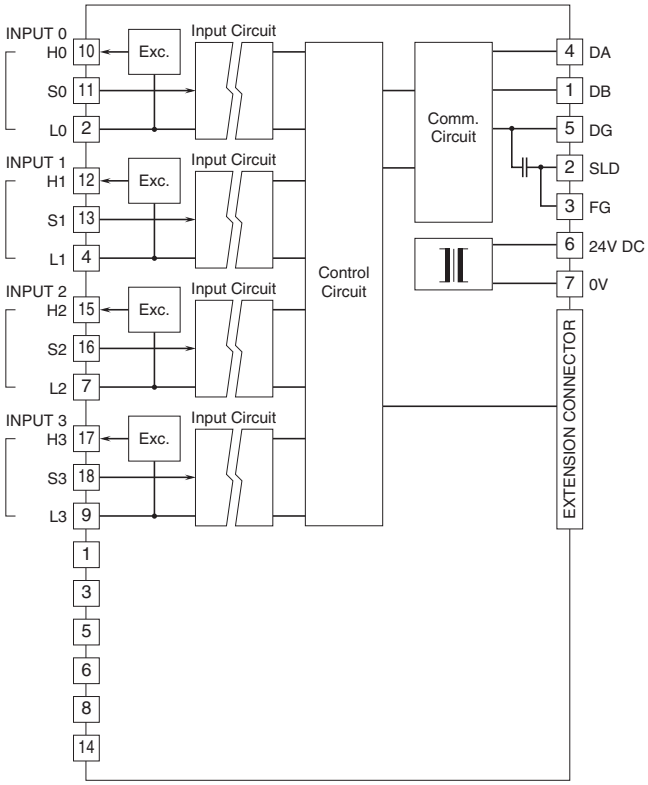

■ **Input Connection Example**

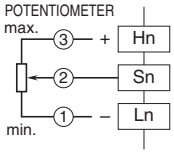

MG CO., LTD.
www.mgco.jp

AC CURRENT INPUT MODULE, 4 points

(clamp-on current sensor CLSE use)

MODEL: R7C-CT4E

SPECIFICATIONS

Isolation: Input 0 to input 1 to input 2 to input 3 to power input to CC-Link or FG
CC-Link: Conforms to Version 1.10
Station type: Remote device
Data allocation: 1
Converted data range:
Engineering unit value (A) × 100 (Integer)
(Engineering unit value (A) × 1000 (Integer) for CLSE-R5)
Input range (Optional)
CLSE-R5: 0 – 5 A AC
CLSE-05: 0 – 50 A AC
CLSE-10: 0 – 100 A AC
CLSE-20: 0 – 200 A AC
CLSE-40: 0 – 400 A AC
CLSE-60: 0 – 600 A AC
Frequency: 50/60 Hz
Overload capacity: 120 % continuous
Operational range: 5 – 115 % of rating (Operational range for the CLSE-60 is limited up to approx. 109 % (65535).)
(Note: Use for the circuit not exceed 480 V)
Conversion rate / conversion accuracy:
10 msec./±2.0 %, 20 msec./±1.0 %, 40 msec./±0.5 %, 80 msec./±0.5 %
(The conversion accuracy does not include the accuracy of the sensor.)
Response time: ≤ 1.0 sec. (0 – 90 %)
Temperature coefficient: ±0.015 %/°C (±0.008 %/°F)

OPERATING MODE SETTING

(*) Factory setting

• Input Range (SW1-5, 1-6, 1-7, 1-8)

SW1-5	SW1-6	SW1-7	SW1-8	Input range
OFF	OFF	OFF	OFF	CLSE-60 (*)
ON	OFF	OFF	OFF	CLSE-40
OFF	ON	OFF	OFF	CLSE-20
ON	ON	OFF	OFF	CLSE-10
OFF	OFF	ON	OFF	CLSE-05
ON	OFF	ON	OFF	CLSE-R5
ON	ON	ON	ON	PC Configurator setting

• Conversion Rate / Accuracy (SW1-3, 1-4)

SW1-3	SW1-4	Conversion rate / Accuracy
OFF	OFF	80 msec. / ±0.5% (*)
ON	OFF	40 msec. / ±0.5%
OFF	ON	20 msec. / ±1.0%
ON	ON	10 msec. / ±2.0%

• Extension (SW1-1, 1-2)

SW1-1	SW1-2	Extension
OFF	OFF	No extension (*)
ON	OFF	Discrete input, 8 or 16 points
OFF	ON	Discrete output, 8 or 16 points

TERMINAL ASSIGNMENTS

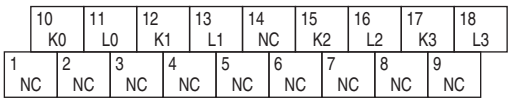

NO.	ID	FUNCTION	NO.	ID	FUNCTION
1	NC	No connection	10	K0	AC current K0
2	NC	No connection	11	L0	AC current L0
3	NC	No connection	12	K1	AC current K1
4	NC	No connection	13	L1	AC current L1
5	NC	No connection	14	NC	No connection
6	NC	No connection	15	K2	AC current K2
7	NC	No connection	16	L2	AC current L2
8	NC	No connection	17	K3	AC current K3
9	NC	No connection	18	L3	AC current L3

CIRCUIT DIAGRAM

Note: In order to improve EMC performance, bond the FG terminal to ground.
Caution: FG terminal is NOT a protective conductor terminal.

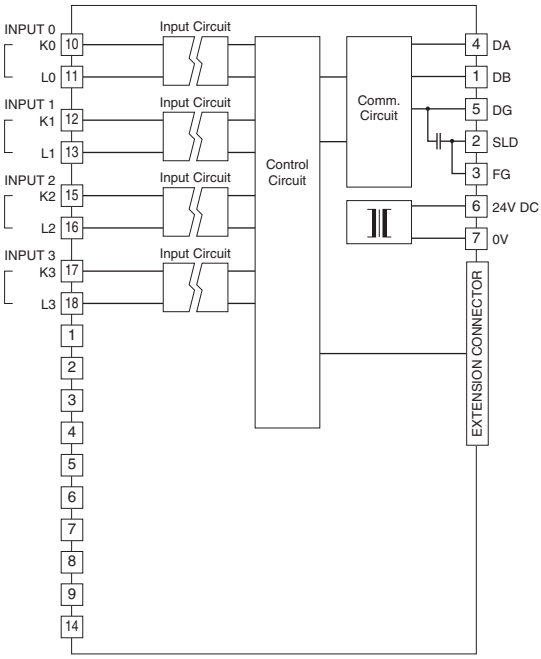

■ **Input Connection Example**

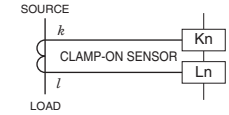

MG CO., LTD.
www.mgco.jp

TOTALIZED PULSE INPUT MODULE, 8 points

MODEL: R7C-PA8

SPECIFICATIONS

Common: Positive or negative common (NPN/PNP) per 8 points
Number of I/O: Input, 8 points
Pulse Input status indicator: LED turns ON with contact ON
Isolation: Input to power input to CC-Link or FG
CC-Link: Conforms to Version 1.10
Station type: Remote device
Data allocation: 1 or 4
■ **Excitation (PNP, NPN input)**
Sensing voltage: 24 V DC ±10 %; ripple 5 %p-p max
ON voltage / ON current: ≥ 16 V DC (input terminal - Cx) / ≤ 3.7 mA
OFF voltage / OFF current: ≤ 5 V DC (input terminal - Cx) / ≤ 1 mA
Voltage pulse input
ON voltage / ON current: ≥ 16 V DC (input terminal - Cx) / ≤ 3.7 mA
OFF voltage / OFF current: ≤ 5 V DC (input terminal - Cx) / ≤ 1 mA
Input current: ≤ 5.5 mA per point at 24 V DC
Input resistance: Approx. 4.4 kΩ
ON delay: ≤ 2.0 msec.
OFF delay: ≤ 2.0 msec.
Max. Frequency: 100 Hz (This unit is designed to be able to accept a frequency up to 100 Hz, however,'chattering' contact must be avoided for accurate measuring of such high frequency. Use relays that do not cause any chattering.)
Minimum ON/OFF pulse requirements: 5 msec.
Accumulated pulse count: 0 - 4 294 967 295
Max. accumulated pulse count: 1 000 - 4 294 967 295 (Factory default: 4 294 967 295)
Overflow: 0 or 1 (Factory default: 0)

OPERATING MODE SETTING

(*) Factory setting
Note: Be sure to set unused SW1-4 through 1-8 to OFF.

• Data Allocation (SW1-3)

SW1-3D	Data allocation
OFF	1 (*)
ON	4

• Extension (SW1-1, 1-2)

SW1-1	SW1-2	Extension
OFF	OFF	No extension (*)
ON	OFF	Discrete input, 8 or 16 points
OFF	ON	Discrete output, 8 or 16 points

TERMINAL ASSIGNMENTS

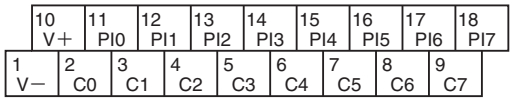

NO.	ID	FUNCTION	NO.	ID	FUNCTION
1	V –	Excitation (–)	10	V +	Excitation (+)
2	C0	Common	11	PI0	Input 0
3	C1	Common	12	PI1	Input 1
4	C2	Common	13	PI2	Input 2
5	C3	Common	14	PI3	Input 3
6	C4	Common	15	PI4	Input 4
7	C5	Common	16	PI5	Input 5
8	C6	Common	17	PI6	Input 6
9	C7	Common	18	PI7	Input 7

MG CO., LTD.
www.mgco.jp

CIRCUIT DIAGRAM

Caution: FG terminal is NOT a protective conductor terminal.

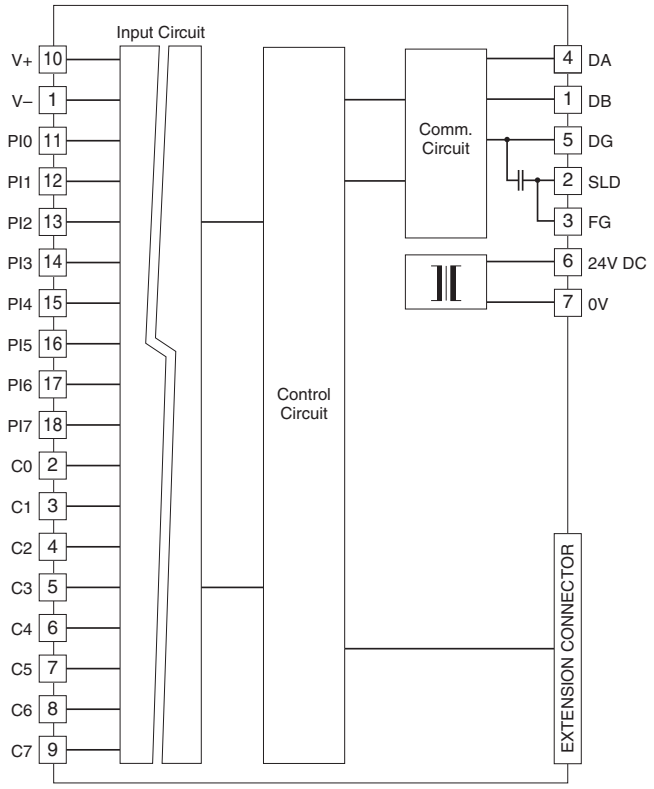

■ **Input Circuit**

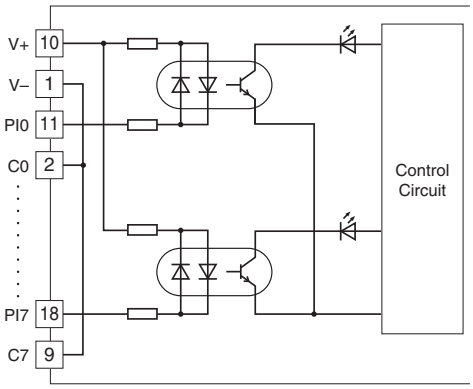

■ **Input Connection Examples**

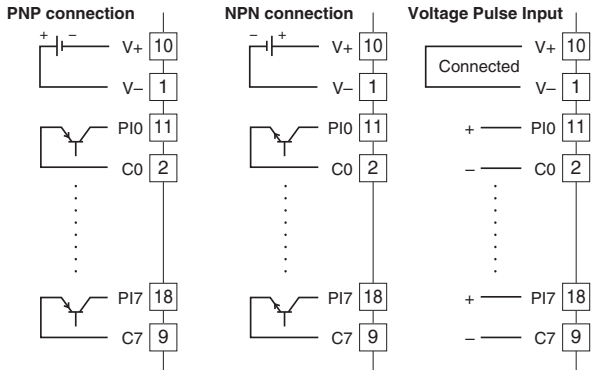

MG CO., LTD.
www.mgco.jp

CURRENT LOOP SUPPLY INPUT MODULE

(4 points, non-isolated)

MODEL: R7C-DS4N

SPECIFICATIONS

Isolation: Input 0 or input 1 or input 2 or input 3 to power input to CC-Link or FG
CC-Link: Conforms to Version 1.10
Station type: Remote device
Data allocation: 1
Converted data range: 0 – 10000 of the input range
Supplu Output
Exc. supply: 24 V DC, ≥160 mA
·**Shortcircuit Protection**
Current limited: 30 mA max.
Protected time duration: No limit
Input range: 4 - 20 mA DC
Input resistance: 250 Ω resistorincorporated
Conversion rate / conversion accuracy:
10 msec./±0.8 %, 20 msec./±0.4 %, 40 msec./±0.2 %, 80 msec./±0.1 %
Response time: Conversion rate × 2 + 50 msec. (0 – 90 %)
Temperature coefficient: ±0.015 %/°C (±0.008 %/°F)

OPERATING MODE SETTING

(*) Factory setting

· Extension (SW1-1, 1-2)

SW1-1	SW1-2	Extension
OFF	OFF	No extension (*)
ON	OFF	Discrete input, 8 or 16 points
OFF	ON	Discrete output, 8 or 16 points

· Conversion rate / conversion accuracy

SW1-3	SW1-4	Conversion rate / conversion accuracy
OFF	OFF	80ms / ±0.1% (*)
ON	OFF	40ms / ±0.2%
OFF	ON	20ms / ±0.4%
ON	ON	10ms / ±0.8%

TERMINAL ASSIGNMENTS

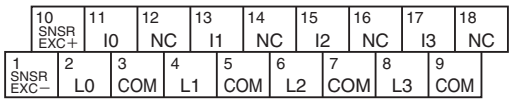

NO.	ID	FUNCTION	NO.	ID	FUNCTION
1	SNSR EXC-	Exc. supply –	10	SNSR EXC+	Exc. supply +
2	L0	Supply for 2-wire transmitter +0	11	I0	Supply for 2-wire transmitter -0/ Current input +0
3	COM	Common	12	NC	Unused
4	L1	Supply for 2-wire transmitter +1	13	I1	Supply for 2-wire transmitter -1/ Current input +1
5	COM	Common	14	NC	Unused
6	L2	Supply for 2-wire transmitter +2	15	I2	Supply for 2-wire transmitter -2/ Current input +2
7	COM	Common	16	NC	Unused
8	L3	Supply for 2-wire transmitter +3	17	I3	Supply for 2-wire transmitter -3/ Current input +3
9	COM	Common	18	NC	Unused

MG CO., LTD.
www.mgco.jp

CIRCUIT DIAGRAM

Note: In order to improve EMC performance, bond the FG terminal to ground.
Caution: FG terminal is NOT a protective conductor terminal.

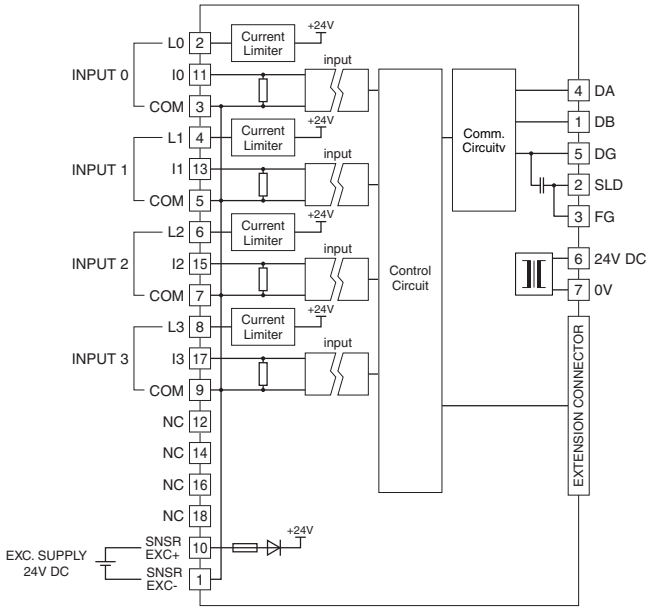

■ **When Used as Current Loop Supply**

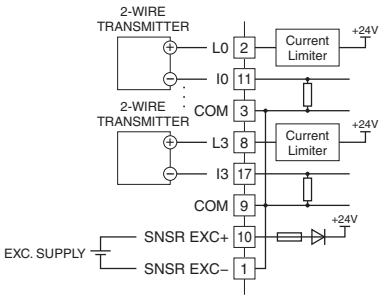

■ **When Used as Current Input**

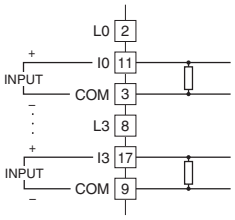

DC VOLTAGE OUTPUT MODULE, 2 points

MODEL: R7C-YV2

SPECIFICATIONS

Isolation: Output 0 to output 1 to power input to CC-Link or FG
CC-Link: Conforms to Version 1.10
Station type: Remote device
Data allocation: 1
Converted data range: 0 – 10000 of the output range
Output range
Wide span voltage: -10 – +10 V DC, -5 – +5 V DC, 0 – 10 V DC, 0 – 5 V DC, 1 – 5 V DC
Narrow span voltage: -1 – +1 V DC, 0 – 1 V DC, -0.5 – +0.5 V DC
Operational range: -11.5 – +11.5 V DC or -15 – +115 %
Load resistance: ≥ 100 kΩ
Conversion accuracy: ±0.1 %
Response time: 250 msec. (0 – 90 %)
Temperature coefficient: ±0.015 %/°C (±0.008 %/°F)

OPERATING MODE SETTING

(*) Factory setting
Note: Be sure to set unused SW1-3 to OFF.

• Output Range (SW1-5, 1-6, 1-7, 1-8)

SW1-5	SW1-6	SW1-7	SW1-8	Output range
OFF	OFF	OFF	OFF	-10 – +10 V DC (*)
ON	OFF	OFF	OFF	-5 – +5 V DC
OFF	ON	OFF	OFF	-1 – +1 V DC
ON	ON	OFF	OFF	0 – 10 V DC
OFF	OFF	ON	OFF	0 – 5 V DC
ON	OFF	ON	OFF	1 – 5 V DC
OFF	ON	ON	OFF	0 – 1 V DC
ON	ON	ON	OFF	-0.5 – +0.5 V DC
ON	ON	ON	ON	PC Configurator setting

• Output at the Loss of Communication (SW1-4)

SW1-4	Output at the loss of communication
OFF	Reset the output (to -15% or approx. -11.5V DC)
ON	Hold the output (*) (maintains the last data received normally)

• Extension (SW1-1, 1-2)

SW1-1	SW1-2	Extension
OFF	OFF	No extension (*)
ON	OFF	Discrete input, 8 or 16 points
OFF	ON	Discrete output, 8 or 16 points

TERMINAL ASSIGNMENTS

NO.	ID	FUNCTION	NO.	ID	FUNCTION
1	NC	No connection	6	NC	No connection
2	COM0	Common 0	7	VH0	Wide span volt. 0
3	COM0	Common 0	8	VL0	Narrow span volt. 0
4	COM1	Common 1	9	VH1	Wide span volt. 1
5	COM1	Common 1	10	VL1	Narrow span volt. 1

CIRCUIT DIAGRAM

Note: In order to improve EMC performance, bond the FG terminal to ground.
Caution: FG terminal is NOT a protective conductor terminal.

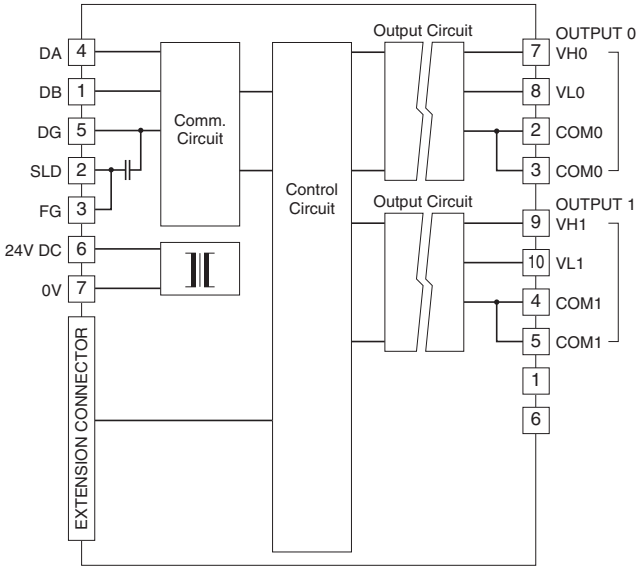

■ **Output Connection Examples**

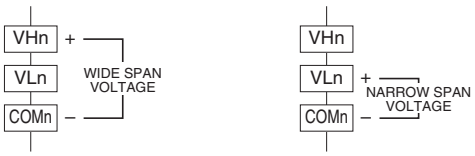

MG CO., LTD.
www.mgco.jp

DC VOLTAGE OUTPUT MODULE, 4 points

MODEL: R7C-YV4

SPECIFICATIONS

Isolation: Output 0 to output 1 to output 2 to output 3 to power input to CC-Link or FG
CC-Link: Conforms to Version 1.10
Station type: Remote device
Data allocation: 1
Converted data range: 0 – 10000 of the output range
Output rang: -10 - +10V DC, -5 - +5V DC, 0 - 10V DC, 0 - 5V DC, 1 - 5V DC
Operational range: -11.5 – +11.5 V DC or -15 – +115 %
Load resistance: ≥ 20 kΩ
Conversion accuracy: ±0.1 %
Response time: 250 msec. (0 – 90 %)
Temperature coefficient: ±0.015 %/°C (±0.008 %/°F)

OPERATING MODE SETTING

(*) Factory setting
Note: Be sure to set unused SW1-1 through SW1-3 to OFF.

• Output Range (SW1-5, 1-6, 1-7, 1-8)

SW1-5	SW1-6	SW1-7	SW1-8	Output range
OFF	OFF	OFF	OFF	-10 – +10V DC (*)
ON	OFF	OFF	OFF	-5 – +5V DC
ON	ON	OFF	OFF	0 – 10V DC
OFF	OFF	ON	OFF	0 – 5V DC
ON	OFF	ON	OFF	1 – 5V DC
ON	ON	ON	ON	PC Configurator setting

• Output at the Loss of Communication (SW1-4)

SW1-4	Output at the loss of communication
OFF	Reset the output (to -15% or approx. -11.5V DC)
ON	Hold the output (*) (maintains the last data received normally)

TERMINAL ASSIGNMENTS

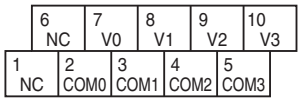

NO.	ID	FUNCTION	NO.	ID	FUNCTION
1	NC	No connection	6	NC	No connection
2	COM0	Common 0	7	V0	Voltage Output 0
3	COM1	Common 1	8	V1	Voltage Output 1
4	COM2	Common 2	9	V2	Voltage Output 2
5	COM3	Common 3	10	V3	Voltage Output 3

CIRCUIT DIAGRAM

Note: In order to improve EMC performance, bond the FG terminal to ground.
Caution: FG terminal is NOT a protective conductor terminal.

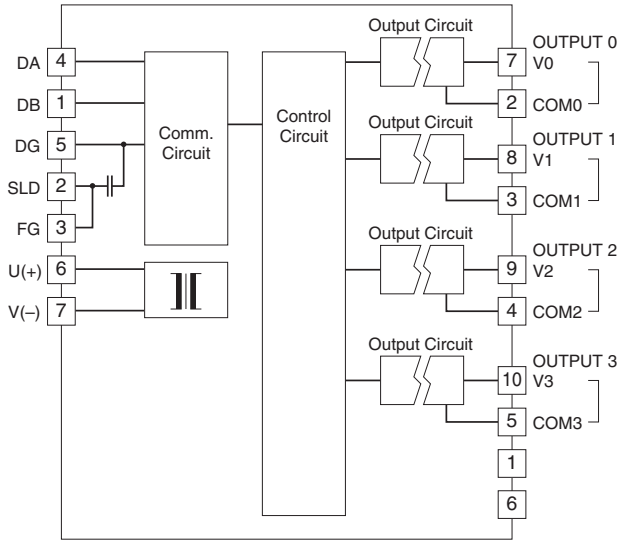

MG CO., LTD.
www.mgco.jp

DC CURRENT OUTPUT MODULE, 2 points

MODEL: R7C-YS2

SPECIFICATIONS

Isolation: Output 0 to output 1 to power input to CC-Link or FG
CC-Link: Conforms to Version 1.10
Station type: Remote device
Data allocation: 1
Converted data range: 0 – 10000 of the output range
Output range: 4 – 20 mA DC
Load resistance: ≤ 600Ω
Conversion accuracy: ±0.1 %
Response time: 250 msec. (0 – 90 %)
Temperature coefficient: ±0.015 %/°C (±0.008 %/°F)

OPERATING MODE SETTING

(*) Factory setting
Note: Be sure to set unused SW1-3 and 1-5 through 1-8 to OFF.

• Output at the Loss of Communication (SW1-4)

SW1-4	Output at the loss of communication
OFF	Reset the output (to -15%)
ON	Hold the output (*) (maintains the last data received normally)

• Extension (SW1-1, 1-2)

SW1-1	SW1-2	Extension
OFF	OFF	No extension (*)
ON	OFF	Discrete input, 8 or 16 points
OFF	ON	Discrete output, 8 or 16 points

TERMINAL ASSIGNMENTS

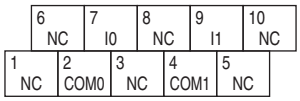

NO.	ID	FUNCTION	NO.	ID	FUNCTION
1	NC	No connection	6	NC	No connection
2	COM0	Common 0	7	I0	Current 0
3	NC	No connection	8	NC	No connection
4	COM1	Common 1	9	I1	Current 1
5	NC	No connection	10	NC	No connection

CIRCUIT DIAGRAM

Note: In order to improve EMC performance, bond the FG terminal to ground.
Caution: FG terminal is NOT a protective conductor terminal.

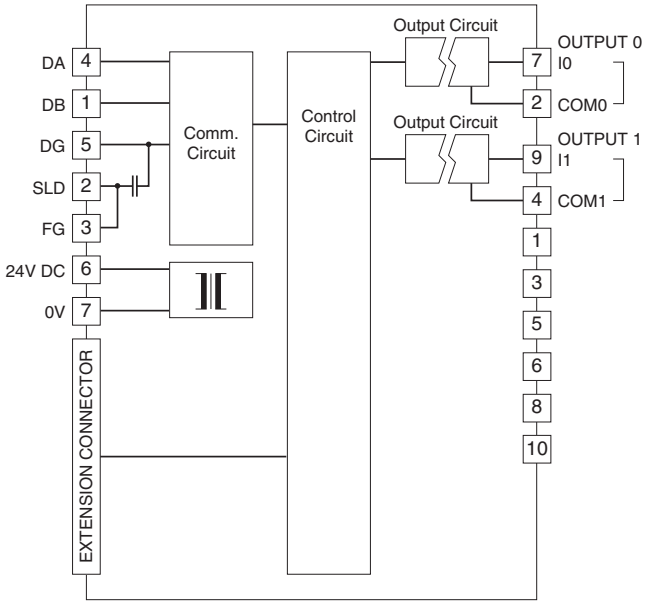

MG CO., LTD.
www.mgco.jp

DC CURRENT OUTPUT MODULE, 4 points

MODEL: R7C-YS4

SPECIFICATIONS

Isolation: Output 0 to output 1 to output 2 to output 3 to power input to CC-Link or FG
CC-Link: Conforms to Version 1.10
Station type: Remote device
Data allocation: 1
Converted data range: 0 – 10000 of the output range
Output range: 4 – 20 mA DC
Load resistance: ≤ 550Ω
Conversion accuracy: ±0.1 %
Response time: 250 msec. (0 – 90 %)
Temperature coefficient: ±0.015 %/°C (±0.008 %/°F)

OPERATING MODE SETTING

(*) Factory setting
Note: Be sure to set unused SW1-1 through 1-3 and 1-5 through 1-8 to OFF.

• Output at the Loss of Communication (SW1-4)

SW1-4	Output at the loss of communication
OFF	Reset the output (to -15%)
ON	Hold the output (*) (maintains the last data received normally)

TERMINAL ASSIGNMENTS

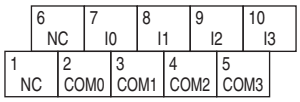

NO.	ID	FUNCTION	NO.	ID	FUNCTION
1	NC	No connection	6	NC	No connection
2	COM0	Common 0	7	I0	Current 0
3	COM1	Common 1	8	I1	Current 1
4	COM2	Common 2	9	I2	Current 2
5	COM3	Common 3	10	I3	Current 3

CIRCUIT DIAGRAM

Note: In order to improve EMC performance, bond the FG terminal to ground.
Caution: FG terminal is NOT a protective conductor terminal.

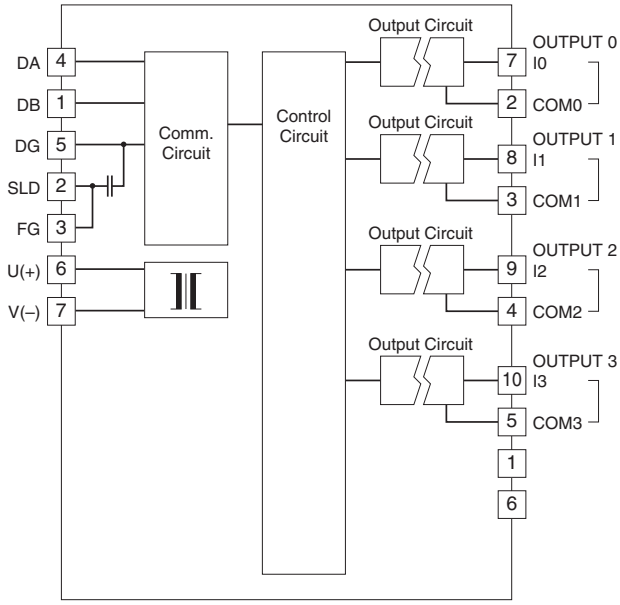

MG CO., LTD.
www.mgco.jp

DISCRETE INPUT EXTENSION MODULE, 8 points

MODEL: R7C-EA8

SPECIFICATIONS

Common: Positive or negative common (NPN/PNP) per 8 points
Number of I/O: Input, 8 points
Maximum inputs applicable at once: No limit (at 24 V DC)
Input status indicator: LED turns ON with contact ON
Isolation: Input to internal circuits
Rated input voltage: 24 V DC ±10 %; ripple 5 %p-p max.
ON voltage / current: ≥ 15 V DC (input – COM) / ≥ 3.5 mA
OFF voltage / current: ≤ 5 V DC (input – COM) / ≤ 1 mA
Input current: ≤ 5.5 mA per point at 24 V DC
Input resistance: Approx. 4.4 kΩ
ON delay: ≤ 2.0 msec.
OFF delay: ≤ 2.0 msec.

TERMINAL ASSIGNMENTS

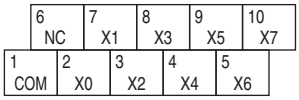

NO.	ID	FUNCTION	NO.	ID	FUNCTION
1	COM	Common	6	NC	No Connection
2	X0	Input 0	7	X1	Input 1
3	X2	Input 2	8	X3	Input 3
4	X4	Input 4	9	X5	Input 5
5	X6	Input 6	10	X7	Input 7

CIRCUIT DIAGRAM

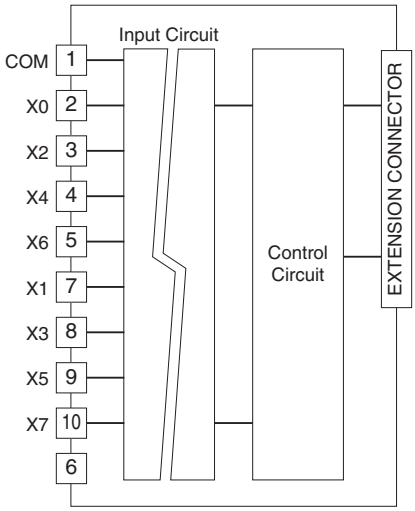

■ **Input Circuit**

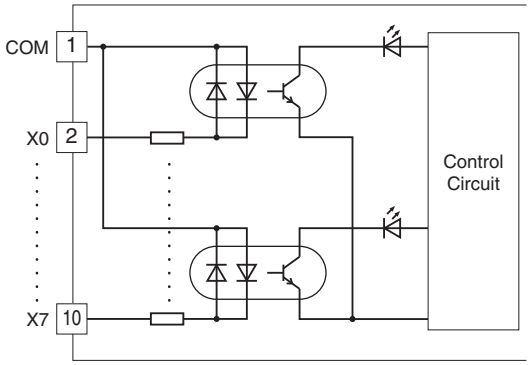

■ **Input Connection Examples**

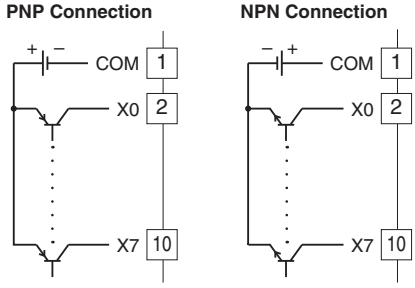

MG CO., LTD.
www.mgco.jp

DISCRETE INPUT EXTENSION MODULE, 16 points

MODEL: R7C-EA16

SPECIFICATIONS

Common: Positive or negative common (NPN/PNP) per 16 points
Number of I/O: Input, 16 points
Maximum inputs applicable at once: No limit (at 24 V DC)
Input status indicator: LED turns ON with contact ON
Isolation: Input to internal circuits
Rated input voltage: 24 V DC ±10 %; ripple 5 %p-p max.
ON voltage / current: ≥ 15 V DC (input – COM) / ≥ 3.5 mA
OFF voltage / current: ≤ 5 V DC (input – COM) / ≤ 1 mA
Input current: ≤ 5.5 mA per point at 24 V DC
Input resistance: Approx. 4.4 kΩ
ON delay: ≤ 2.0 msec.
OFF delay: ≤ 2.0 msec.

TERMINAL ASSIGNMENTS

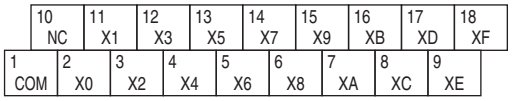

NO.	ID	FUNCTION	NO.	ID	FUNCTION
1	COM	Common	10	NC	No Connection
2	X0	Input 0	11	X1	Input 1
3	X2	Input 2	12	X3	Input 3
4	X4	Input 4	13	X5	Input 5
5	X6	Input 6	14	X7	Input 7
6	X8	Input 8	15	X9	Input 9
7	XA	Input 10	16	XB	Input 11
8	XC	Input 12	17	XD	Input 13
9	XE	Input 14	18	XF	Input 15

CIRCUIT DIAGRAM

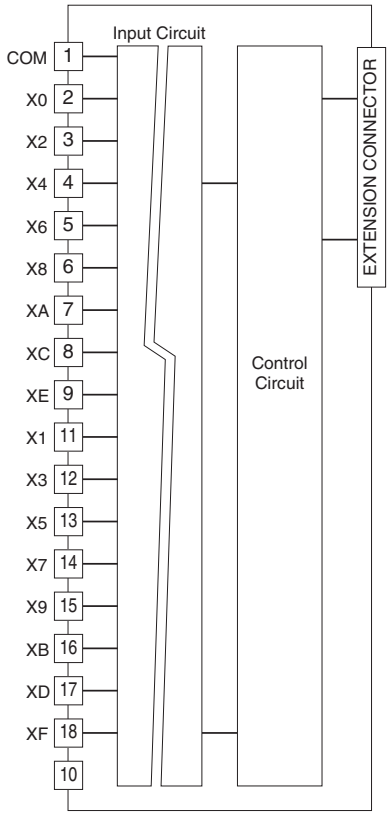

■ **Input Circuit**

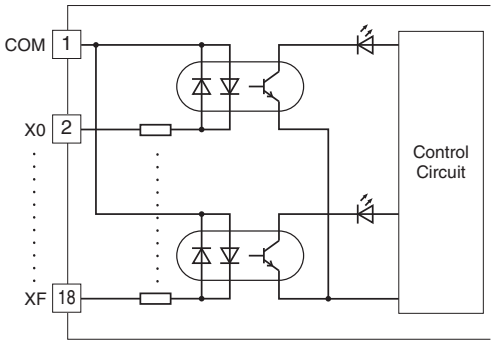

■ **Input Connection Examples**

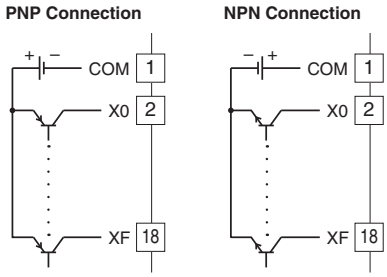

MG CO., LTD.
www.mgco.jp

NPN TRANSISTOR OUTPUT EXTENSION MODULE, 8 points

MODEL: R7C-EC8A

SPECIFICATIONS

Common: Negative common (NPN) per 8 points
Number of I/O: Output, 8 points
Maximum outputs applicable at once: No limit (at 24 V DC)
Output status indicator: LED turns ON with contact ON
Isolation: Output to internal circuits
Rated load voltage: 24 V DC ±10 %
Rated output current: 0.25 A per point, 2.0 A per common
Residual voltage: ≤ 1.2 V
Leakage current: ≤ 0.1 mA
ON delay: ≤ 0.5 msec.
OFF delay: ≤ 1.5 msec.
(When driving an inductive load, connect a diode in parallel with the load.)

TERMINAL ASSIGNMENTS

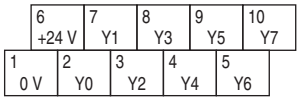

NO.	ID	FUNCTION	NO.	ID	FUNCTION
1	0 V	0 V (common)	6	+24 V	24 V DC
2	Y0	Output 0	7	Y1	Output 1
3	Y2	Output 2	8	Y3	Output 3
4	Y4	Output 4	9	Y5	Output 5
5	Y6	Output 6	10	Y7	Output 7

CIRCUIT DIAGRAM

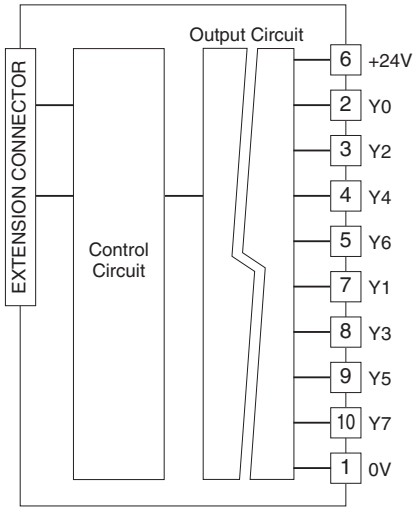

■ **Output Circuit**

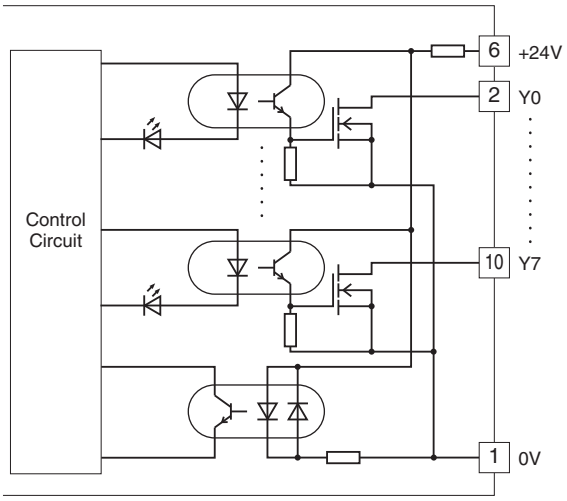

■ **Output Connection Example**

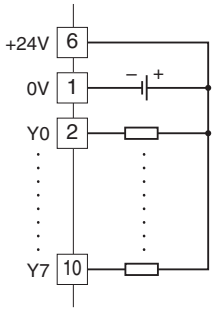

MG CO., LTD.
www.mgco.jp

NPN TRANSISTOR OUTPUT EXTENSION MODULE, 16 points

MODEL: R7C-EC16A

SPECIFICATIONS

Common: Negative common (NPN) per 16 points
Number of I/O: Output, 16 points
Maximum outputs applicable at once: No limit (at 24 V DC)
Output status indicator: LED turns ON with contact ON
Isolation: Output to internal circuits
Rated load voltage: 24 V DC ±10 %
Rated output current: 0.25 A per point, 2.0 A per common
Residual voltage: ≤ 1.2 V
Leakage current: ≤ 0.1 mA
ON delay: ≤ 0.5 msec.
OFF delay: ≤ 1.5 msec.
(When driving an inductive load, connect a diode in parallel with the load.)

TERMINAL ASSIGNMENTS

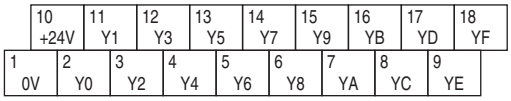

NO.	ID	FUNCTION	NO.	ID	FUNCTION
1	0 V	0 V (common)	10	+24 V	24 V DC
2	Y0	Output 0	11	Y1	Output 1
3	Y2	Output 2	12	Y3	Output 3
4	Y4	Output 4	13	Y5	Output 5
5	Y6	Output 6	14	Y7	Output 7
6	Y8	Output 8	15	Y9	Output 9
7	YA	Output 10	16	YB	Output 11
8	YC	Output 12	17	YD	Output 13
9	YE	Output 14	18	YF	Output 15

CIRCUIT DIAGRAM

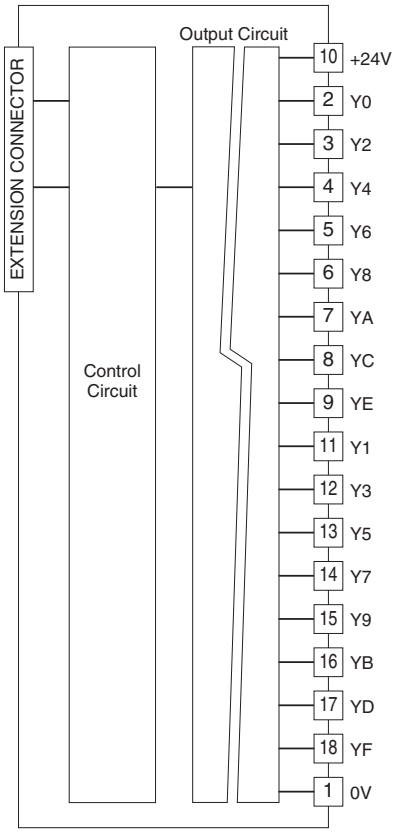

■ **Output Circuit**

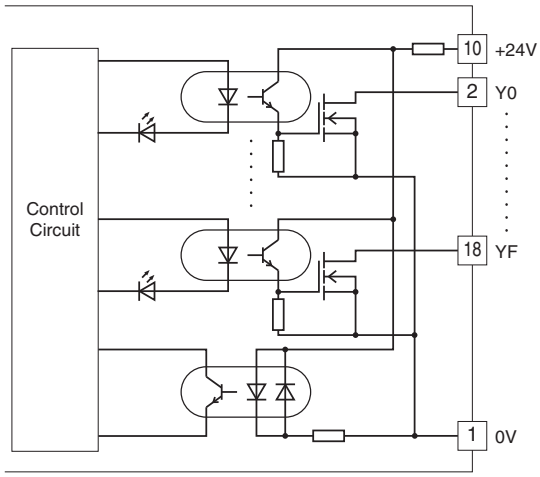

■ **Output Connection Example**

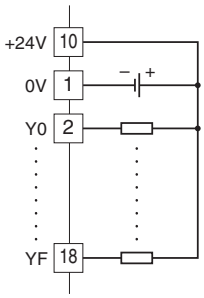

MG CO., LTD.
www.mgco.jp

PNP TRANSISTOR OUTPUT EXTENSION MODULE, 8 points

MODEL: R7C-EC8B

SPECIFICATIONS

Common: Positive common (PNP) per 8 points
Number of I/O: Output, 8 points
Maximum outputs applicable at once: No limit (at 24 V DC)
Output status indicator: LED turns ON with contact ON
Isolation: Output to internal circuits
Rated load voltage: 24 V DC ±10 %
Rated output current: 0.25 A per point, 2.0 A per common
Residual voltage: ≤ 1.2 V
Leakage current: ≤ 0.1 mA
ON delay: ≤ 0.5 msec.
OFF delay: ≤ 1.5 msec.
(When driving an inductive load, connect a diode in parallel with the load.)

TERMINAL ASSIGNMENTS

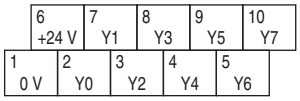

NO.	ID	FUNCTION	NO.	ID	FUNCTION
1	0 V	0 V	6	+24 V	24 V DC (common)
2	Y0	Output 0	7	Y1	Output 1
3	Y2	Output 2	8	Y3	Output 3
4	Y4	Output 4	9	Y5	Output 5
5	Y6	Output 6	10	Y7	Output 7

CIRCUIT DIAGRAM

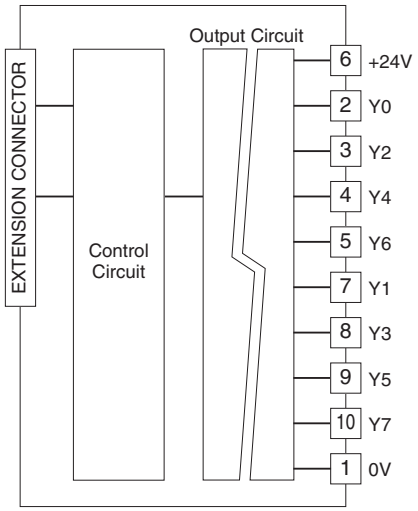

■ **Output Circuit**

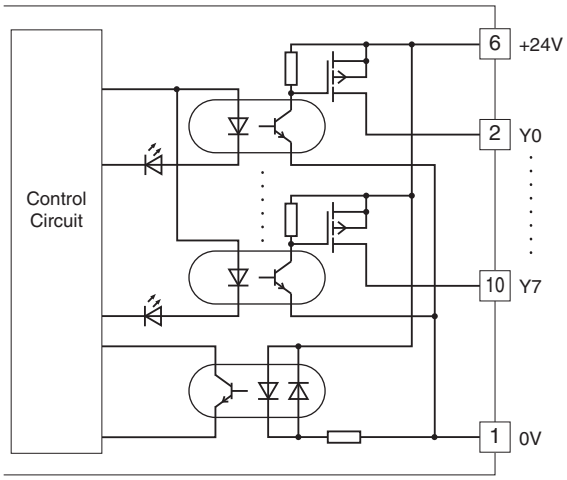

■ **Output Connection Example**

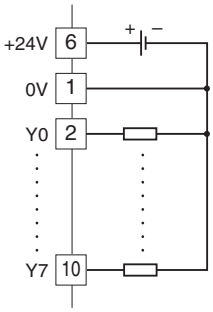

MG CO., LTD.
www.mgco.jp

PNP TRANSISTOR OUTPUT EXTENSION MODULE, 16 points

MODEL: R7C-EC16B

SPECIFICATIONS

Common: Positive common (PNP) per 16 points
Number of I/O: Output, 16 points
Maximum outputs applicable at once: No limit (at 24 V DC)
Output status indicator: LED turns ON with contact ON
Isolation: Output to internal circuits
Rated load voltage: 24 V DC ±10 %
Rated output current: 0.25 A per point, 2.0 A per common
Residual voltage: ≤ 1.2 V
Leakage current: ≤ 0.1 mA
ON delay: ≤ 0.5 msec.
OFF delay: ≤ 1.5 msec.
(When driving an inductive load, connect a diode in parallel with the load.)

TERMINAL ASSIGNMENTS

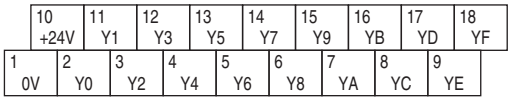

NO.	ID	FUNCTION	NO.	ID	FUNCTION
1	0 V	0 V	10	+24 V	24 V DC (common)
2	Y0	Output 0	11	Y1	Output 1
3	Y2	Output 2	12	Y3	Output 3
4	Y4	Output 4	13	Y5	Output 5
5	Y6	Output 6	14	Y7	Output 7
6	Y8	Output 8	15	Y9	Output 9
7	YA	Output 10	16	YB	Output 11
8	YC	Output 12	17	YD	Output 13
9	YE	Output 14	18	YF	Output 15

CIRCUIT DIAGRAM

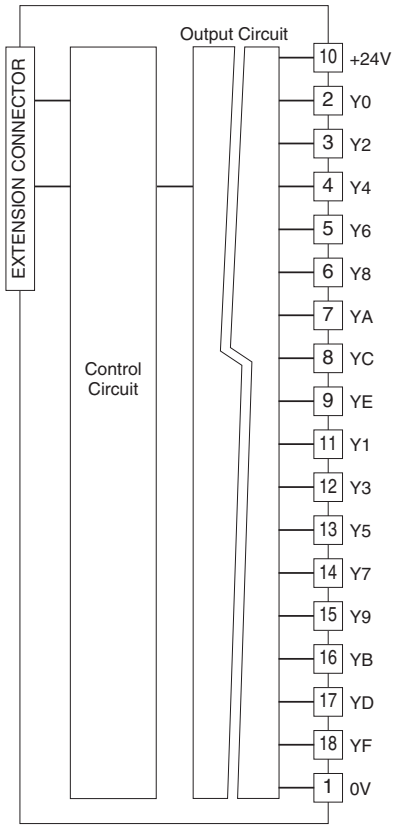

■ **Output Circuit**

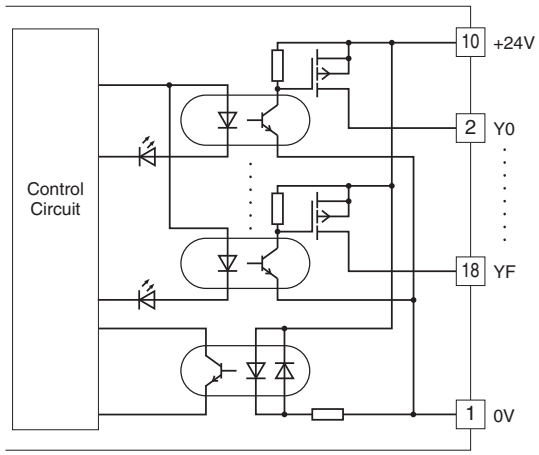

■ **Output Connection Example**

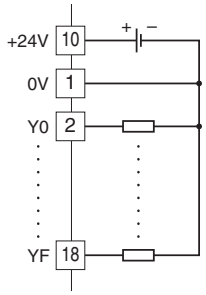

MG CO., LTD.
www.mgco.jp

RELAY CONTACT OUTPUT EXTENSION MODULE

MODEL: R7C-EC8C

SPECIFICATIONS

Common: 1 common per 4 points (4 terminals)
Common current: Max. 8 A (4 terminals)
Number of I/O: Relay contact output, 8 points
Maximum outputs applicable at once: No limit (at 24 V DC)
Output status indicator: LED turns ON with contact ON
Isolation: Output to internal circuits
Relay driving power: 24 V DC ±10 %, ≥ 60 mA
Rated load: 250 V AC @2 A (cos ø = 1)
30 V DC @2 A (resistive load)
Electrical life 10^5 cycles (rate 30/min.)
Maximum switching voltage: 250 V AC or 30 V DC
Maximum switching power: 500 VA or 60 W
Minimum load: 24 V DC @5 mA
Mechanical life: 2×10^7 cycles (rate 300/min.)
When driving an inductive load, external contact protection and noise quenching are recommended.
ON delay: ≤ 10 msec.
OFF delay: ≤ 10 msec.

TERMINAL ASSIGNMENTS

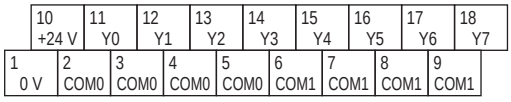

NO.	ID	FUNCTION	NO.	ID	FUNCTION
1	0V	0 V	10	+24V	24 V DC
2	COM0	Common 0	11	Y0	Output 0
3	COM0	Common 0	12	Y1	Output 1
4	COM0	Common 0	13	Y2	Output 2
5	COM0	Common 0	14	Y3	Output 3
6	COM1	Common 1	15	Y4	Output 4
7	COM1	Common 1	16	Y5	Output 5
8	COM1	Common 1	17	Y6	Output 6
9	COM1	Common 1	18	Y7	Output 7

CIRCUIT DIAGRAM

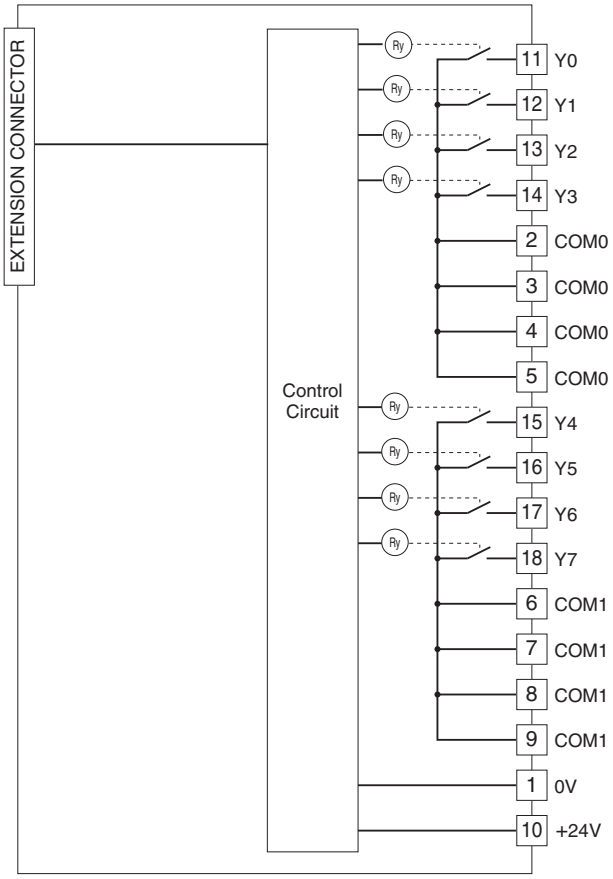

■ **Output Connection Example**

4 points / common

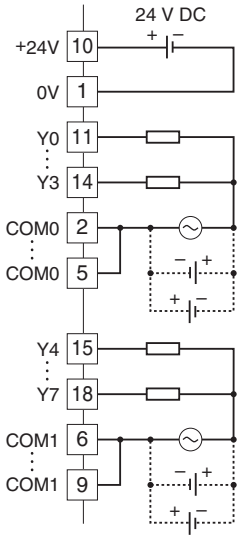

8 points / common

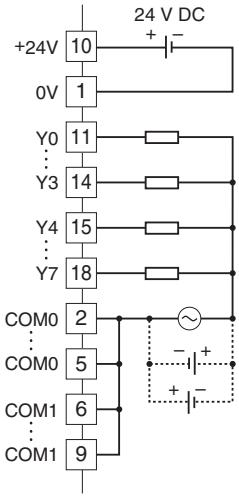

MG CO., LTD.
www.mgco.jp

⚠ Specifications are subject to change without notice.

MG CO., LTD.
www.mgco.jp