Remote I/O R7 Series

DeviceNet® I/O MODULE

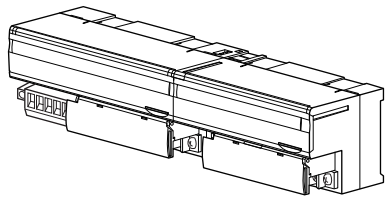

ORDERING INFORMATION

• Basic module: R7D-[1][2]
Specify a code from below for each of [1] and [2].
(e.g. R7D-SV4/Q)
• Specify the specification for option code /Q
(e.g. /C01/SET)

• Extension module: R7D-[1][2]
Specify a code from below for each of [1] and [2].
(e.g. R7D-EC16A/Q)
• Specify the specification for option code /Q
(e.g. /C01)

BASIC MODULE: R7D-[1][2]

[1] I/O TYPE

DA16: Discrete input, 16 points
(Option /UL Not selectable)
DC16A: NPN transistor output, 16 points
(Option /UL Not selectable)
DC16B: PNP transistor output, 16 points
(Option /UL Not selectable)
DC8C: Relay contact output, 8 points
(Option /UL Not selectable)
(Not usable with 'extension' modules)
DC8E: Relay contact output, 8 points
(Option /UL Not selectable)
RR8: Remote control relay control, 8 points
(CE not available. Option /UL Not selectable)
SV4: DC voltage/current input (10 V/20 mA), 4 points
TS4: Thermocouple input, 4 points
RS4: RTD input, 4 points
(Option /UL Not selectable)
MS4: Potentiometer input, 4 points
(Option /UL Not selectable)
CT4E: AC current input, 4 points, clamp-on current sensor CLSE use (Option /UL Not selectable)
PA8: Totalized pulse input, 8 points,
(Option /UL not selectable)
YV2: DC voltage output, 2 points
YV2A: DC voltage output, external power supply, 2 points
(Option /UL Not selectable)
YS2: DC current output, 2 points
YS2A: DC current output, external power supply, 2 points
(Option /UL Not selectable)

[2] OPTIONS (multiple selections)

Standards & Approvals
blank: CE marking
/UL: UL approval, CE marking
Other Options
blank: none
/Q: Option other than the above (specify the specification)
(UL not available)

SPECIFICATIONS OF OPTION: Q (multiple selections)

COATING (For the detail, refer to our web site.)
/C01: Silicone coating
/C02: Polyurethane coating
/C03: Rubber coating
EX-FACTORY SETTING
/SET: Preset according to the Ordering Information Sheet
(No. ESU-7802-x)

EXTENSION MODULE: R7D-[1][2]

[1] I/O TYPE

EA8: Discrete input, 8 points
(Option /UL Not selectable)
EA16: Discrete input, 16 points
(Option /UL Not selectable)
EC8A: NPN transistor output, 8 points
(Option /UL Not selectable)
EC16A: NPN transistor output, 16 points
(Option /UL Not selectable)
EC8B: PNP transistor output, 8 points
(Option /UL Not selectable)
EC16B: PNP transistor output, 16 points
(Option /UL Not selectable)
EC8C: Relay contact output, 8 points
(Option /UL Not selectable)

[2] OPTIONS

blank: none
/Q: Option other than the above (specify the specification)

MG CO., LTD.
www.mgco.jp

SPECIFICATIONS OF OPTION: Q

COATING (For the detail, refer to our web site.)
/C01: Silicone coating
/C02: Polyurethane coating
/C03: Rubber coating

FUNCTIONS & FEATURES

The R7D interfaces analog and discrete I/O signals with a PLC or PC via DeviceNet.
A 'basic' module can be attached with an 'extension' module.
(R7D-DC8C can not be attached with an 'extension' module.)
By combining two modules, single station can handle mixed analog and discrete signals, 32-point discrete inputs, 32-point discrete outputs, 16-point discrete I/Os and other combinations of signals.
Input sensor type (thermocouple, RTD) and range can be selected with the front DIP switches for all channels. In order to set different selections for individual channels, zero/span adjustments, scaling and temperature unit, use the PC Configurator Software (model: R7CON)

RELATED PRODUCTS

• PC Configurator cable (model: MCN-CON or COP-US)
• PC configurator software (model: R7CON)
• EDS file
The EDS files for basic modules and configurator software are downloadable at our web site.
(Extension modules are registered in the EDS file as a combination of a basic module.)
• Clamp-on current sensor (model: CLSE)
For R7D-CT4E, the clamp-on current sensors must be ordered separately. Required number depends upon the channel number.

GENERAL SPECIFICATIONS

■ Common Specifications
Network power supply voltage: 11 – 25 V DC
(supplied through the network terminal)
Insulation resistance: ≥ 100 MΩ with 500 V DC
Dielectric strength: 1500 V AC @1 minute
(between isolated circuits)
Operating temperature: -10 to +55°C (14 to 131°F)
Operating humidity: 30 to 90 %RH (non-condensing)
Atmosphere: No corrosive gas or heavy dust
Storage temperature: -20 to +65°C (-4 to +149°F)
Mounting: DIN rail (35 mm wide)
Connection
DeviceNet: Euro type connector terminal
Applicable wire size: 0.2 to 2.5 mm^2, stripped length 7 mm
I/O: M3 separable screw terminals (torque 0.5 N·m)
Screw terminal material: Nickel-plated steel
Solderless terminal: Refer to the drawing at the end of the section.
Recommended manufacturer: Japan Solderless Terminal MFG.Co.Ltd, Nichifu Co.,ltd
Applicable wire size: 0.25 to 1.65 mm^2 (AWG22 to 16)
Housing material: Flame-resistant resin (gray)
Configurator connection: 2.5 dia. miniature jack (not available with extension module)

■ Current Consumption at 24 V DC; at 11 V DC; Weight
R7D-DA16: Approx. 40 mA; 75 mA; 200 g (7.1 oz)
R7D-DC16A: Approx. 50 mA; 90 mA; 200 g (7.1 oz)
R7D-DC16B: Approx. 50 mA; 90 mA; 200 g (7.1 oz)
R7D-DC8C: Approx. 50 mA (60 mA); 90 mA; 200 g (7.1 oz)
R7D-DC8E: Approx. 40 mA (40 mA); 70 mA; 180 g (6.3 oz)
R7D-RR8: Approx. 50 mA; 90 mA; 180 g (6.3 oz)
R7D-SV4: Approx. 60 mA; 110 mA; 200 g (7.1 oz)
R7D-TS4: Approx. 60 mA; 110 mA; 200 g (7.1 oz)
R7D-RS4: Approx. 60 mA; 110 mA; 200 g (7.1 oz)
R7D-MS4: Approx. 60 mA; 110 mA; 200 g (7.1 oz)
R7D-CT4E: Approx. 80 mA; 170 mA; 200 g (7.1 oz)
R7D-PA8: Approx. 40 mA; 70 mA; 200 g (7.1 oz)
R7D-YV2: Approx. 70 mA; 130 mA; 150 g (5.3 oz)
R7D-YV2A: Approx. 35 mA (40 mA); 60 mA; 150 g (5.3 oz)
R7D-YS2: Approx. 100 mA; 200 mA; 150 g (5.3 oz)
R7D-YS2A: Approx. 35 mA (70 mA); 55 mA; 150 g (5.3 oz)
R7D-EA8: Approx. 10 mA; 10 mA; 90 g (3.2 oz)
R7D-EA16: Approx. 20 mA; 20 mA; 150 g (5.3 oz)
R7D-EC8A: Approx. 10 mA; 20 mA; 90 g (3.2 oz)
R7D-EC16A: Approx. 30 mA; 60 mA; 150 g (5.3 oz)
R7D-EC8B: Approx. 10 mA; 20 mA; 90 g (3.2 oz)
R7D-EC16B: Approx. 30 mA; 60 mA; 150 g (5.3 oz)
R7D-EC8C: Approx. 20 mA (40 mA); 50 mA; 150 g (5.3 oz)
The consumed current of supply power for the output is shown in ().

■ **Recommended solderless terminal**

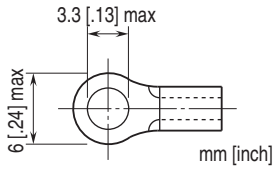

DeviceNet COMMUNICATION

Network cable: Approved for DeviceNet
Baud rate setting: 125 kbps (default), 250 kbps, 500 kbps, auto-tracking (rotary switch)
(Refer to the instruction manual.)
Status indicator LEDs: MS, NS
(Refer to the instruction manual for details.)

MG CO., LTD.
www.mgco.jp

Node address setting: 1 - 63 (rotary switch, default:00)
(Refer to the instruction manual.)
Communication: Supports poll and cyclic
(Bit-strobe and COS (change of state) are not suported)

STANDARDS & APPROVALS

EU conformity:
EMC Directive
  EMI EN 61000-6-4
  EMS EN 61000-6-2
Low Voltage Directive
(R7D-DC8C, R7D-DC8E and R7D-EC8C only. Refer to the instruction manual for the detailed information.)
  EN 61010-1, EN 61010-2-201
  Measurement Category II (output)
  Pollution Degree 2
  Output to communication: Basic insulation (150 V)
RoHS Directive
Approval:
■ R7D-SV4, R7D-TS4, R7D-YS2 and R7D-YV2
UL/C-UL general safety requirements
(UL 61010-1, CAN/CSA-C22.2 No.61010-1-12)
(UL 61010-2-201, CAN/CSA-C22.2 No.61010-2-201)
Note: This equipment is to be supplied by a Class 2 power supply when using as conformity with UL/C-UL.

EXTERNAL VIEW

■ **BASIC MODULE**

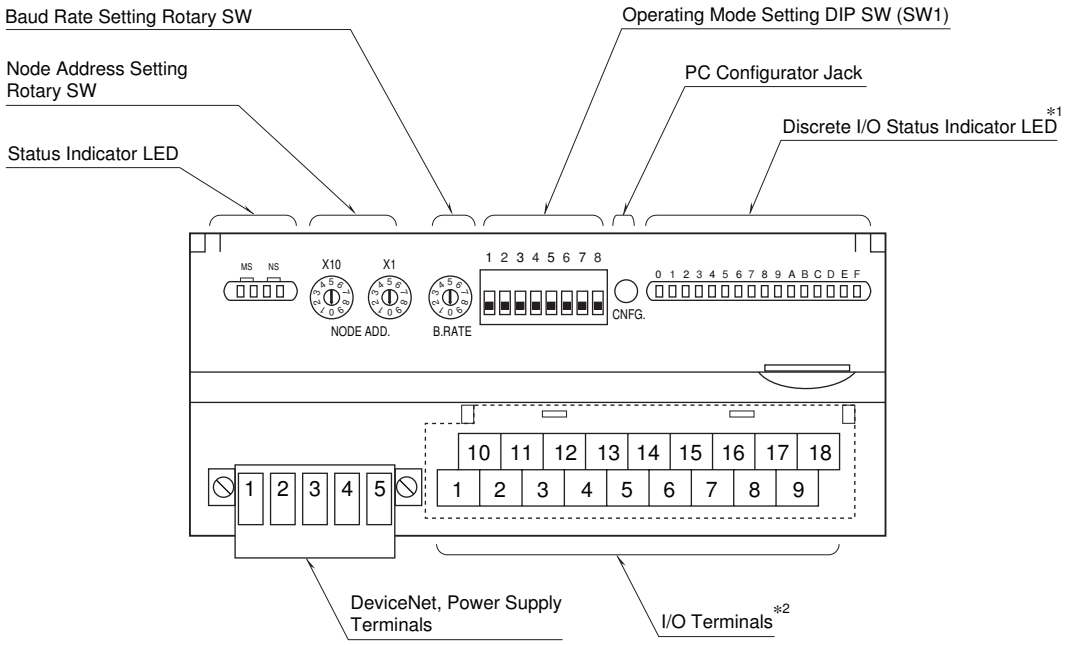

*1. Not available with analog I/O modules.
*2. 10 screw terminals for analog output modules.

■ EXTENSION MODULE

• DISCRETE, 8 POINTS

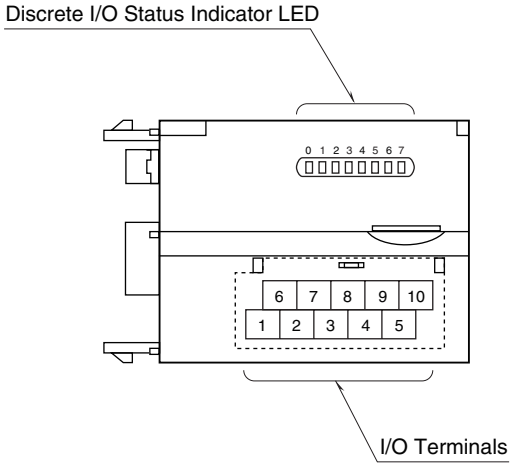

- **DISCRETE, 16 POINTS**

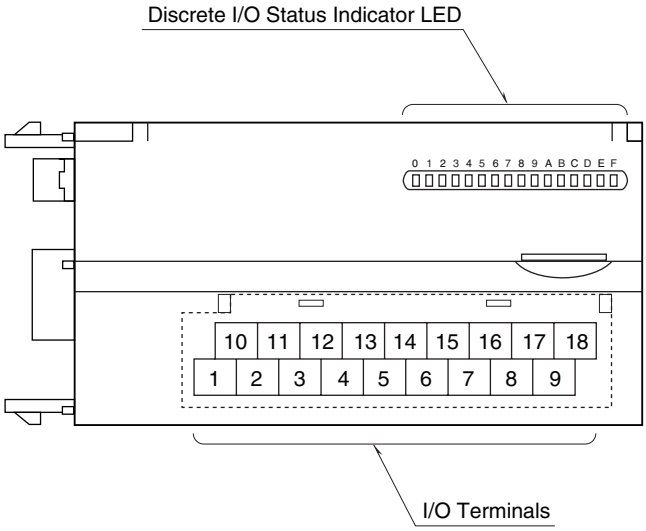

CONNECTION DIAGRAMS

■ **DeviceNet TERMINAL ASSIGNMENT**

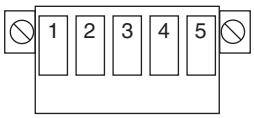

PIN NO.	COLOR	ID	FUNCTION
1	Red	V+	Network power supply +
2	White	CAN_H	Network data High
3	–	Drain	Shield
4	Blue	CAN_L	Network data Low
5	Black	V–	Network power supply –

DATA CONVERSION

■ 0 – 100% DATA CONVERSION

Analog input data is converted into digital representations of 0 – 100% proportional to each scaled range. The converted % values are multiplied by 100 and expressed in 16 bits.
Overrange input is possible from -15 to +115% of the nominal range. When the signal exceeds the limit, the data is fixed at -15% or +115% respectively. Negative value is represented in 2's complements.

• Input Range 0 – 5 V DC

Input Value	Input %	Converted Data, Decimal	Converted Data, Hex
≤ -0.75 V	-15%	-1500	FA24
0 V	0%	0	0
5 V	100%	10000	2710
≥ 5.75 V	115%	11500	2CEC

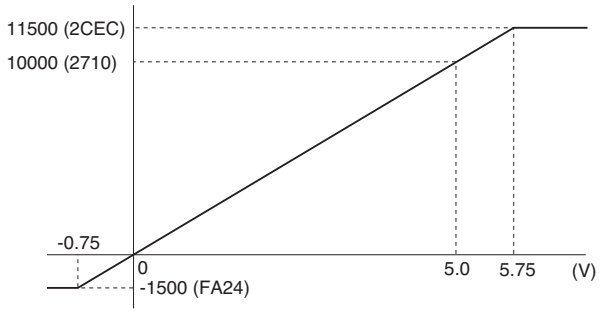

Analog output is converted in the reverse order of the input data. The output range 0 – 5 V DC is expressed as 10000 at 5.0 V (100%) and 0 at 0 V (0%).

■ ENGINEERING UNIT CONVERSION

Engineering unit value °C or K is multiplied by 10 and expressed in 16 bits. °F data is represented in engineering unit value, without multiplication. Engineering unit value A is multiplied by 100 or 1000, expressed in 16 bits. Negative value is represented in 2's complements.

• Input TYPE K Thermocouple

Input Value	Converted Data, Decimal	Converted Data, Hex
≤ -272°C	-2720	F560
-150°C	-1500	FA24
1370°C	13700	3584
≥ 1472°C	14720	3980

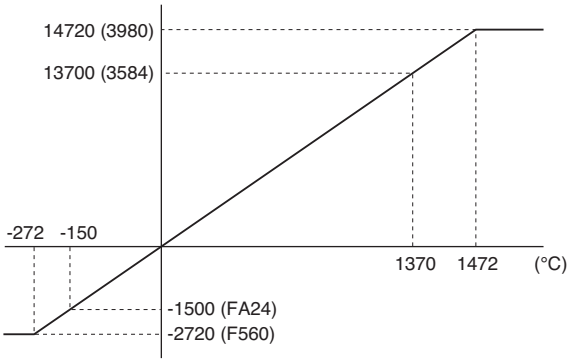

■ COUNT VALUE

The count value is 32-bit data. It is divided in 2 words of 16 bits represented with 2 addresses.The lower address is allocated in the lower word (LSB) and the upper address in the upper word (MSB). The count value is 0 - 4 294 967 295. The maximum count value available is 1 000 - 4 294 967 295. In case of overflow, the vaule is reset to 0 or 1 (configurable) from which the count will restart. The preset of the count value is also available. Use the R7CON or commands for the configuration.

MG CO., LTD.
www.mgco.jp

DATA ALLOCATION

'Begin' address is determined by the R7D's node address and the master setting.

• Example 1. R7D-SV4, without Status

Output Data

Begin +0	R7D-SV4	CH0
+1		CH1
+2		CH2
+3		CH3

Input Data

None

• Example 2. R7D-TS4 + R7D-EC16x, with Status

Output Data

Begin +0	R7D-TS4	CH0
+1		CH1
+2		CH2
+3		CH3
+4	Status	

Input Data

Begin +0	R7D-EC16x

• Example 3. R7D-RS4 + R7D-EA16, with Status

Output Data

Begin +0	R7D-RS4	CH0
+1		CH1
+2		CH2
+3		CH3
+4	R7D-EA16	
+5	Status	

Input Data

None

• Example 4. R7D-YV2 + R7D-EA16, without Status

Output Data

Begin +0	R7D-EA16

Input Data

Begin +0	R7D-YV2	CH0
+1		CH1

• Example 5. R7D-YS2 + R7D-EC16x, with Status

Output Data

Begin +0	Status

Input Data

Begin +0	R7D-YS2	CH0
+1		CH1
+2	R7D-EC16x	

• Example 6. R7D-DA16 + R7D-EC16x, without Status

Output Data

Begin +0	R7D-DA16

Input Data

Begin +0	R7D-EC16x

• Example 7. R7D-DA16 + R7D-EA16, with Status

Output Data

Begin +0	R7D-DA16
+1	R7D-EA16
+2	Status

Input Data

None

• Example 8. R7D-DC16x + R7D-EC16x, with Status

Output Data

Begin +0	Status

Input Data

Begin +0	R7D-DC16x
+1	R7D-EC16x

• Example 9. R7D-DC8C

Output Data

None

Input Data

Begin +0	

• Example 10. R7D-DC8E + R7D-EA16, with Status

Output Data

Begin +0	R7D-EA16
+1	Status

Input Data

Begin +0	R7D-DC8E

• Example 11. R7D-RR8 + R7D-EA16, with Status

Output Data

Begin +0	R7D-RR8
+1	R7D-EA16
+2	Status

Input Data

Begin +0	R7D-RR8

• Example 12. R7D-RR8 + R7D-EC16x, with Status

Output Data

Begin +0	R7D-RR8
+1	Status

Input Data

Begin +0	R7D-RR8
+1	R7D-EC16x

■ **R7D-PA8**

The table below shows data allocation of R7D-PA8. Parameter preset and other settings are available with command setting of R7D-PA8. Set the commands according to the procedure explained next.
Parameter of each channel is two-word integer not signed. Make sure that data is written or read in a two-word unit.
When overflowing, the value to which response can be set is “0” or “1”. The maximum range available is 1000 to 4294967295. (Factory setting: 9999999)
Parameters may be preset to a value between the overflow response value and the maximum value.

OUTPUT DATA (15 – 0)

Begin +0	Data to write (upper)	CH0
+1	Data to write (lower)	CH0
+2	Data to write (upper)	CH1
+3	Data to write (lower)	CH1
+4	Data to write (upper)	CH2
+5	Data to write (lower)	CH2
+6	Data to write (upper)	CH3
+7	Data to write (lower)	CH3
+8	Data to write (upper)	CH4
+9	Data to write (lower)	CH4
+10	Data to write (upper)	CH5
+11	Data to write (lower)	CH5
+12	Data to write (upper)	CH6
+13	Data to write (lower)	CH6
+14	Data to write (upper)	CH7
+15	Data to write (lower)	CH7
+16	Command setting • Command address CH0: Bit 0, 1 CH1: Bit 2, 3 CH2: Bit 4, 5 CH3: Bit 6, 7 CH4: Bit 8, 9 CH5: Bit 10, 11 CH6: Bit 12, 13 CH7: Bit 14, 15 • Command 00: Read data 01: Preset 10: Overflow response value 11: Maximum value	
+17	Extension discrete output data	
+18	–	

INPUT DATA (15 – 0)

Begin + 0	Data to read (upper)	CH0
+1	Data to read (lower)	CH0
+2	Data to read (upper)	CH1
+3	Data to read (lower)	CH1
+4	Data to read (upper)	CH2
+5	Data to read (lower)	CH2
+6	Data to read (upper)	CH3
+7	Data to read (lower)	CH3
+8	Data to read (upper)	CH4
+9	Data to read (lower)	CH4
+10	Data to read (upper)	CH5
+11	Data to read (lower)	CH5
+12	Data to read (upper)	CH6
+13	Data to read (lower)	CH6
+14	Data to read (upper)	CH7
+15	Data to read (lower)	CH7
+16	Command setting • Command address CH0: Bit 0, 1 CH1: Bit 2, 3 CH2: Bit 4, 5 CH3: Bit 6, 7 CH4: Bit 8, 9 CH5: Bit 10, 11 CH6: Bit 12, 13 CH7: Bit 14, 15 • Command 00: Read data 01: Preset 10: Overflow response value 11: Maximum value	
+17	Extension discrete input data	
+18	Status	

I/O DATA DESCRIPTIONS

■ **DISCRETE I/O**

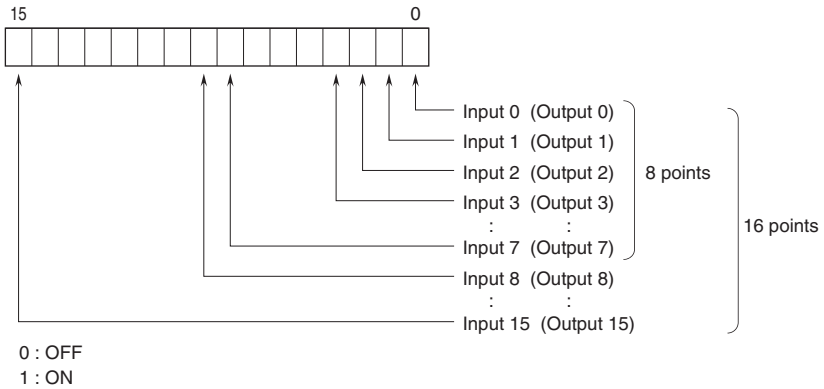

■ **R7D-RR8**

• **Output Data**

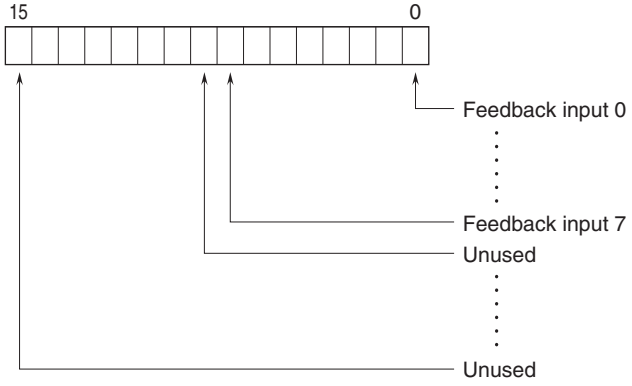

• **Input Data (output data length: 8 bit)**

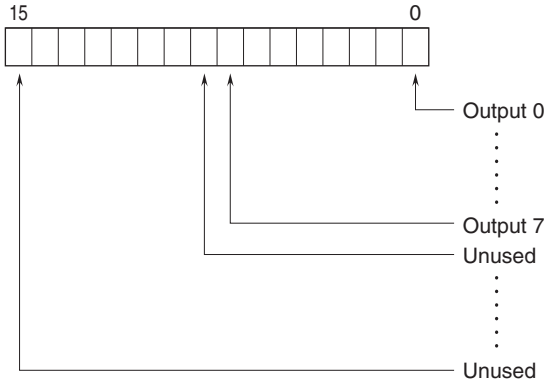

• **Input Data (output data length: 16 bit)**

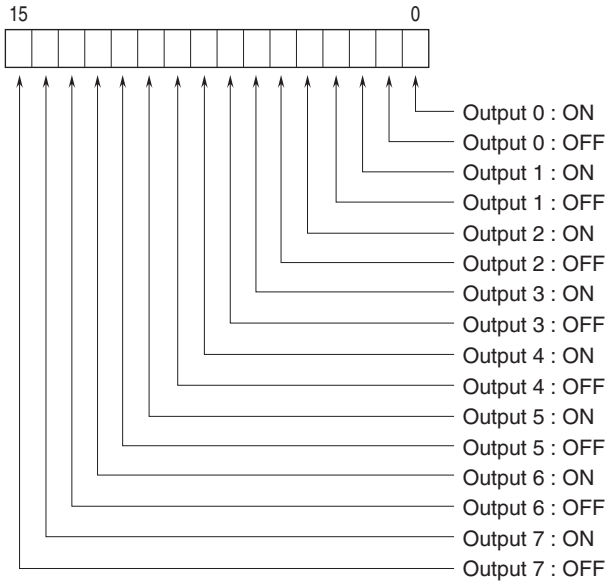

■ **ANALOG I/O**

16-bit binary data
Negative values represented in 2's complements

■ **STATUS**

Bit 0 to 7: Analog input modules (models: R7D-SV4, R7D-TS4, R7D-RS4, R7D-MS4, R7D-CT4E) can show input status of each channel.
Analog output modules (models: R7D-YS2, R7D-YS2A, R7D-YV2, R7D-YV2A), discrete I/O modules (models: R7D-DA16, R7D-DCx) and remote control relay control module (model: R7D-RR8) shows '0' at the same address.

Bit 8 to 10: Shows the power supply status.

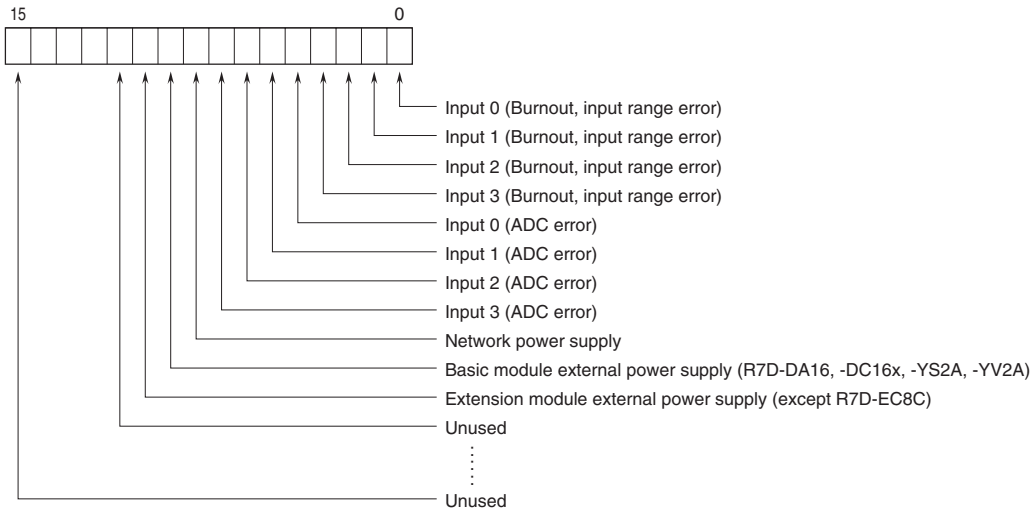

Burnout, input range error (≤ -15%, ≥ +115%)
0 : Normal 1 : Error
ADC error (no response from ADC)
0 : Normal 1 : Error
Power supply
0 : Normal 1 : Error

Note: No status in R7D-DC8C

TRANSMISSION DATA DESCRIPTIONS

■ BASIC MODULE

Transmitted data (word) depends upon the modules types.

MODEL	OUTPUT DATA*1 (R7D to Master)	INPUT DATA*2 (Master to R7D)
R7D-DA16	1	0
R7D-DCx	0	1
R7D-RR8	1	1
R7D-SV4	4	0
R7D-TS4	4	0
R7D-RS4	4	0
R7D-MS4	4	0
R7D-CT4E	4	0
R7D-PA8	17	17
R7D-YV2x	0	2
R7D-YS2x	0	2

■ EXTENSION MODULE

Transmitted data (word) for the extension module is added.

MODEL	OUTPUT DATA*1 (R7D to Master)	INPUT DATA*2 (Master to R7D)
R7D-EAx	1	0
R7D-ECx	0	1

*1. Output Data means those sent to the master.
*2. Input Data means those received from the master.

■ STATUS

Status signal can be included in the transmission data when the setting is enabled using the PC Configurator software (model: R7CON).*3 For details, refer to “STATUS in I/O DATA DESCRIPTIONS”.

STATUS	OUTPUT DATA*1 (R7D to Master)	INPUT DATA*2 (Master to R7D)
Enabled	1	0
Disabled	0	0

*3. The setting is not available as there is no status signal in R7D-DC8C.

EXTENSION MODULE

A ‘basic’ module can be attached with one ‘extension’ module. The extension module is powered from the basic module. By combining two modules, single station can handle mixed analog and discrete signals, 32-point discrete inputs, 32-point discrete outputs, 16-point discrete I/Os and other combinations of signals.
Note: R7D-DC8C is not usable with 'Extension' modules.

■ OUTPUT AT THE LOSS OF COMMUNICATION

The extension module is set to ‘Hold Output’ by factory default setting. The PC Configurator software is used to change the setting to ‘Reset Output.’

■ CONNECTING THE EXTENSION MODULE

1) Remove the extension connector cover located at the side of the basic module.
2) Connect the extension module.

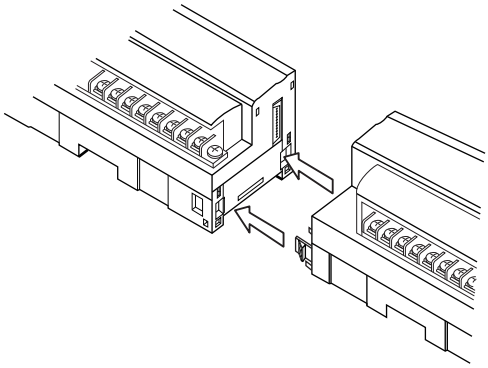

3) Mount the combined module on a DIN rail.

EXTERNAL DIMENSIONS unit: mm [inch]

■ BASIC MODULE

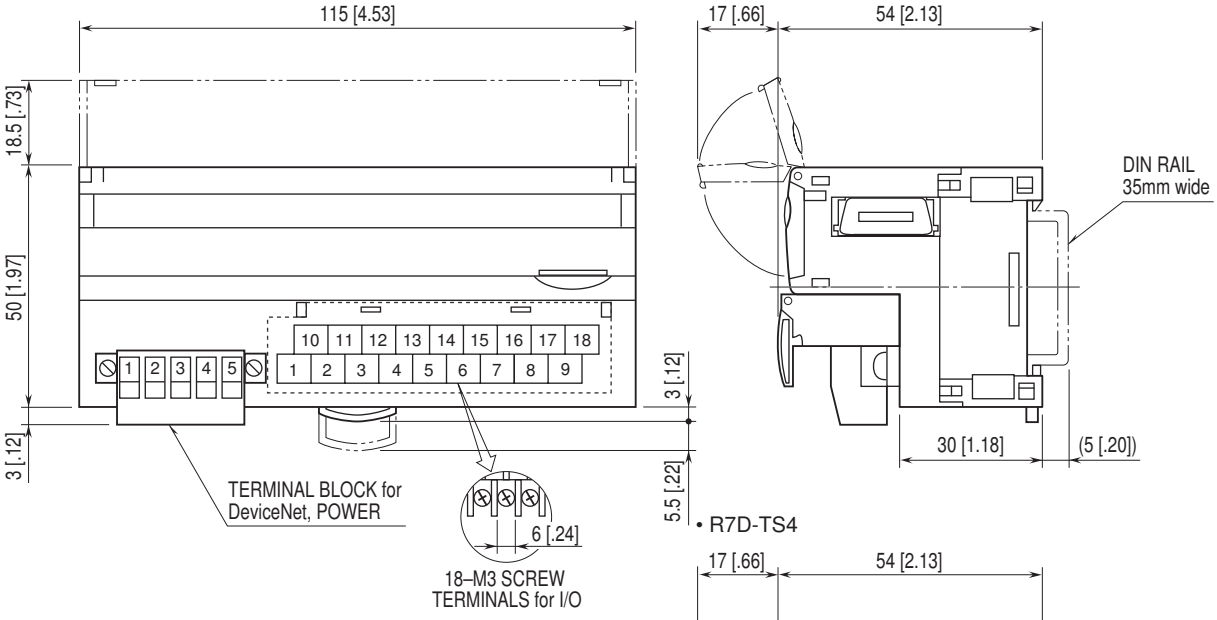

• R7D-TS4

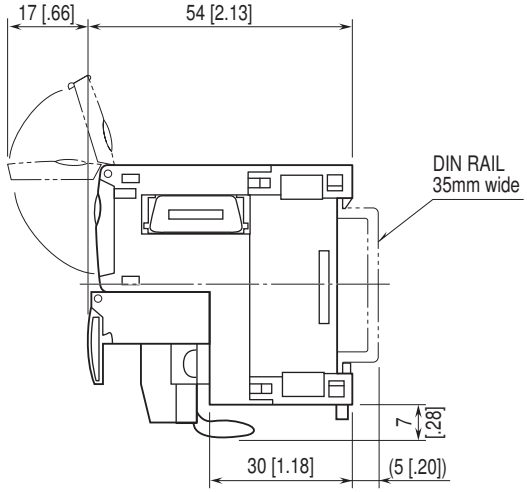

■ ANALOG OUTPUT

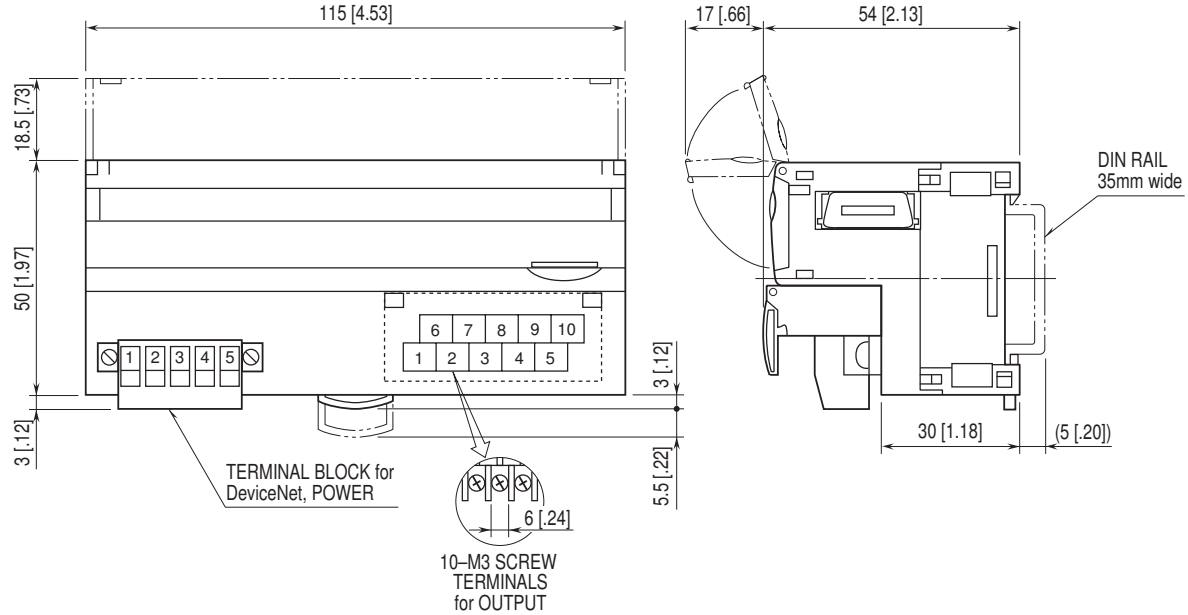

MG CO., LTD.
www.mgco.jp

■ EXTENSION MODULES

●R7D-EA8, EC8A, EC8B

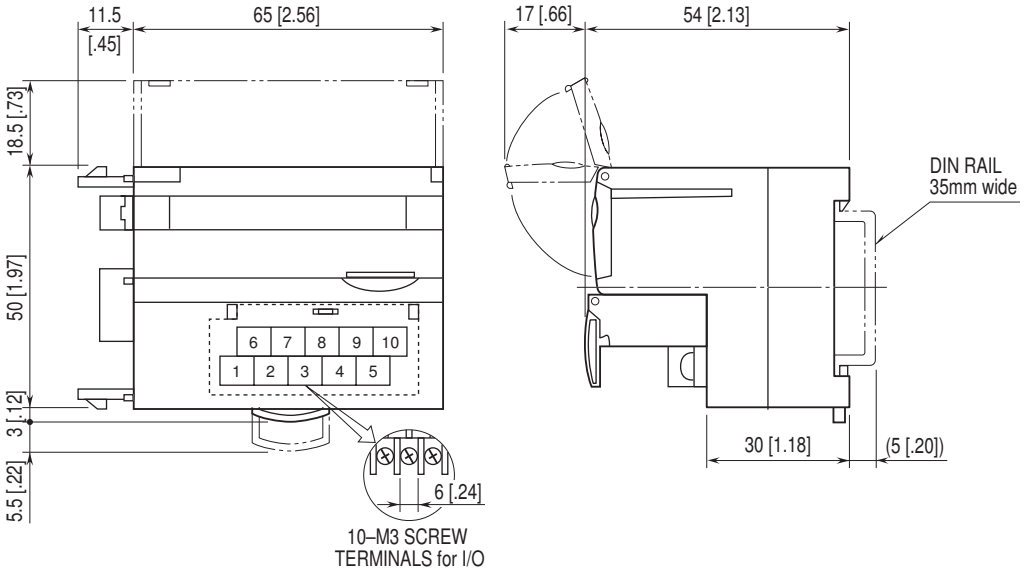

●R7D-EA16, EC16A, EC16B, EC8C

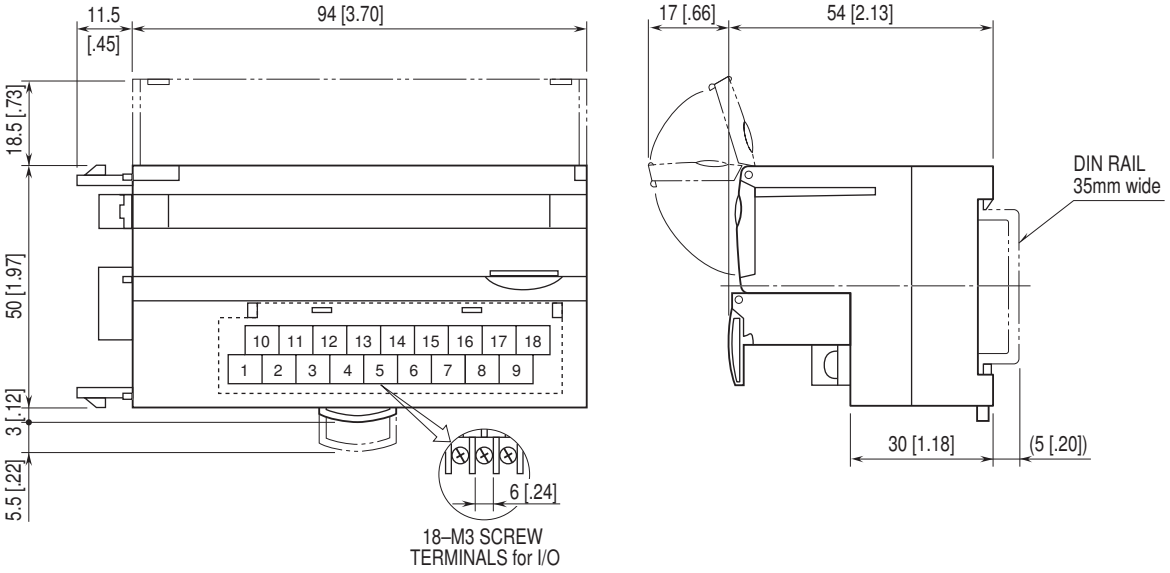

MG CO., LTD.
www.mgco.jp

DISCRETE INPUT MODULE, 16 points

MODEL: R7D-DA16

SPECIFICATIONS

Common: Positive or negative common (NPN/PNP) per 16 points
Number of I/O: Input, 16 points
Maximum inputs applicable at once: No limit (at 24 V DC)
Input status indicator: LED turns ON with contact ON
Isolation: Input to DeviceNet
Rated input voltage: 24 V DC ±10 %; ripple 5 %p-p max.
ON voltage/current: ≥ 15 V DC (input-COM1) / ≥ 3.5 mA
OFF voltage/current: ≤ 5 V DC (input-COM1) / ≤ 1 mA
Input current: ≤ 5.5 mA per point at 24 V DC
Input resistance: Approx. 4.4 kΩ
ON delay: ≤ 2.0 msec.
OFF delay: ≤ 2.0 msec.

OPERATING MODE SETTING

(*) Factory setting
Note: Be sure to set unused SW1-3 through 1-8 to OFF.

• Extension (SW1-1, 1-2)

SW1-1	SW1-2	Extension
OFF	OFF	No extension (*)
ON	OFF	Discrete input, 8 or 16 points
OFF	ON	Discrete output, 8 or 16 points

TERMINAL ASSIGNMENTS

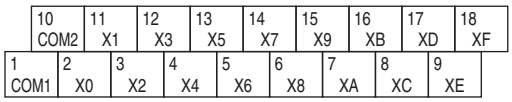

NO.	ID	FUNCTION	NO.	ID	FUNCTION
1	COM1	Common 1	10	COM2	Common 2
2	X0	Input 0	11	X1	Input 1
3	X2	Input 2	12	X3	Input 3
4	X4	Input 4	13	X5	Input 5
5	X6	Input 6	14	X7	Input 7
6	X8	Input 8	15	X9	Input 9
7	XA	Input 10	16	XB	Input 11
8	XC	Input 12	17	XD	Input 13
9	XE	Input 14	18	XF	Input 15

CIRCUIT DIAGRAM

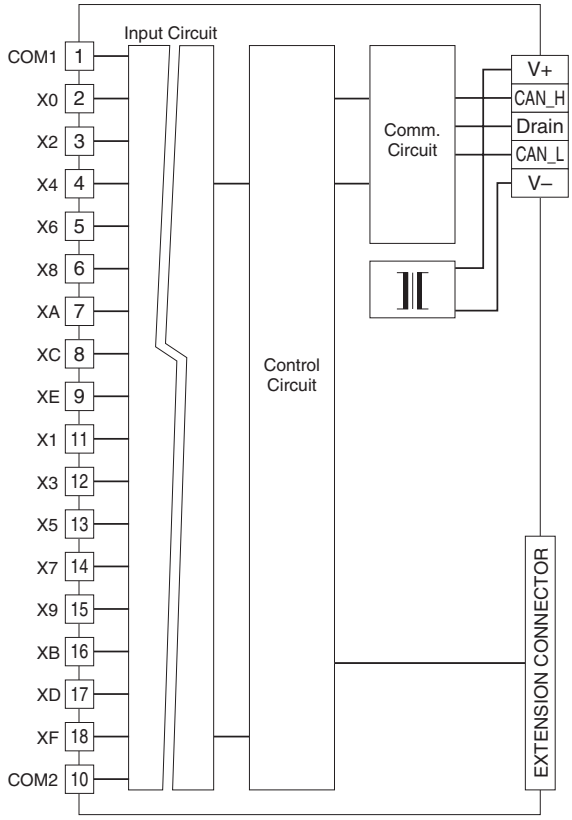

■ **Input Circuit**

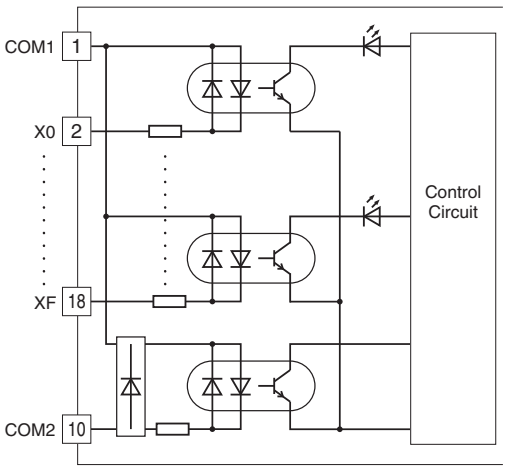

■ **Input Connection Examples**

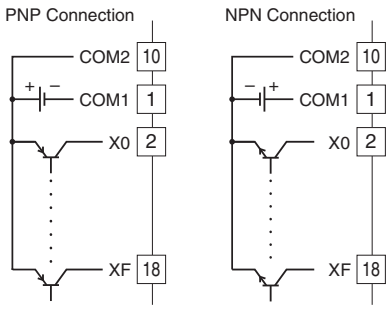

MG CO., LTD.
www.mgco.jp

NPN TRANSISTOR OUTPUT MODULE, 16 points

MODEL: R7D-DC16A

SPECIFICATIONS

Common: Negative common (NPN) per 16 points
Number of I/O: Output, 16 points
Maximum outputs applicable at once: No limit (at 24 V DC)
Output status indicator: LED turns ON with contact ON
Isolation: Output to DeviceNet
Rated load voltage: 24 V DC ±10 %
Rated output current: 0.25 A per point, 2.0 A per common
Residual voltage: ≤ 1.2 V
Leakage current: ≤ 0.1 mA
ON delay: ≤ 0.5 msec.
OFF delay: ≤ 1.5 msec.
(When driving an inductive load, connect a diode in parallel with the load.)

OPERATING MODE SETTING

(*) Factory setting
Note: Be sure to set unused SW1-3 and 1-5 through 1-8 to OFF.

• Output at the Loss of Communication (SW1-4)

SW1-4	Output at the loss of communication
OFF	Reset the output (turned off)
ON	Hold the output (*) (maintains the last data received normally)

• Extension (SW1-1, 1-2)

SW1-1	SW1-2	Extension
OFF	OFF	No extension (*)
ON	OFF	Discrete input, 8 or 16 points
OFF	ON	Discrete output, 8 or 16 points

TERMINAL ASSIGNMENTS

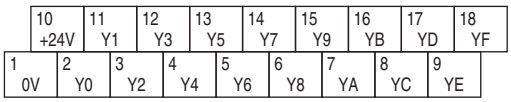

NO.	ID	FUNCTION	NO.	ID	FUNCTION
1	0 V	0 V (common)	10	+24 V	24 V DC
2	Y0	Output 0	11	Y1	Output 1
3	Y2	Output 2	12	Y3	Output 3
4	Y4	Output 4	13	Y5	Output 5
5	Y6	Output 6	14	Y7	Output 7
6	Y8	Output 8	15	Y9	Output 9
7	YA	Output 10	16	YB	Output 11
8	YC	Output 12	17	YD	Output 13
9	YE	Output 14	18	YF	Output 15

CIRCUIT DIAGRAM

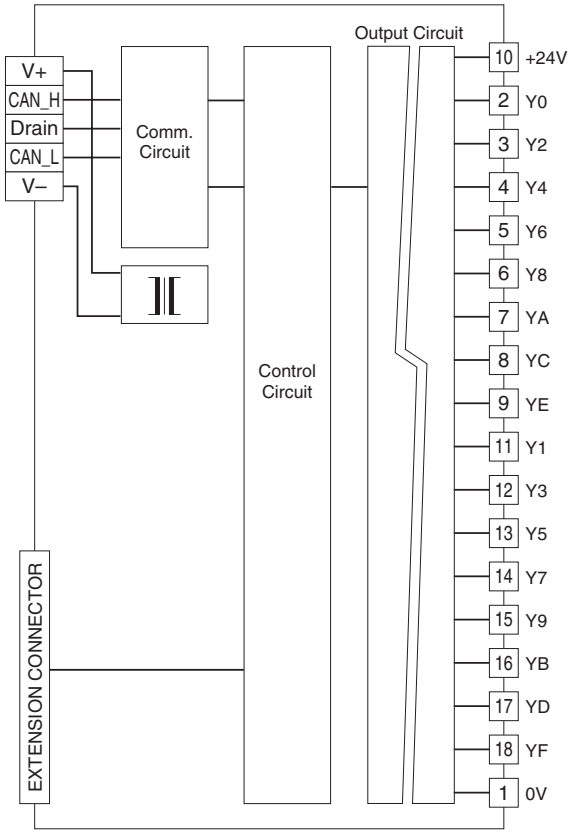

■ **Output Circuit**

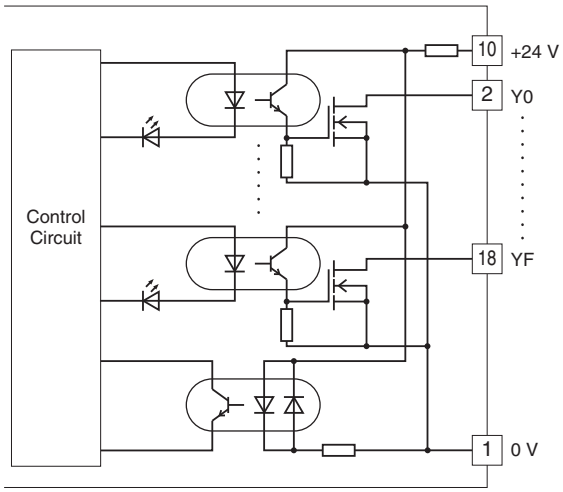

■ **Output Connection Example**

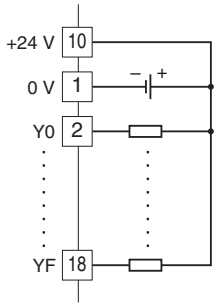

MG CO., LTD.
www.mgco.jp

PNP TRANSISTOR OUTPUT MODULE, 16 points

MODEL: R7D-DC16B

SPECIFICATIONS

Common: Positive common (PNP) per 16 points
Number of I/O: Output, 16 points
Maximum outputs applicable at once: No limit (at 24 V DC)
Output status indicator: LED turns ON with contact ON
Isolation: Output to DeviceNet
Rated load voltage: 24 V DC ±10 %
Rated output current: 0.25 A per point, 2.0 A per common
Residual voltage: ≤ 1.2 V
Leakage current: ≤ 0.1 mA
ON delay: ≤ 0.5 msec.
OFF delay: ≤ 1.5 msec.
(When driving an inductive load, connect a diode in parallel with the load.)

OPERATING MODE SETTING

(*) Factory setting
Note: Be sure to set unused SW1-3 and 1-5 through 1-8 to OFF.

• Output at the Loss of Communication (SW1-4)

SW1-4	Output at the loss of communication
OFF	Reset the output (turned off)
ON	Hold the output (*) (maintains the last data received normally)

• Extension (SW1-1, 1-2)

SW1-1	SW1-2	Extension
OFF	OFF	No extension (*)
ON	OFF	Discrete input, 8 or 16 points
OFF	ON	Discrete output, 8 or 16 points

TERMINAL ASSIGNMENTS

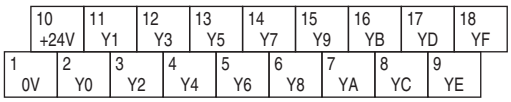

NO.	ID	FUNCTION	NO.	ID	FUNCTION
1	0 V	0 V	10	+24 V	24 V DC (common)
2	Y0	Output 0	11	Y1	Output 1
3	Y2	Output 2	12	Y3	Output 3
4	Y4	Output 4	13	Y5	Output 5
5	Y6	Output 6	14	Y7	Output 7
6	Y8	Output 8	15	Y9	Output 9
7	YA	Output 10	16	YB	Output 11
8	YC	Output 12	17	YD	Output 13
9	YE	Output 14	18	YF	Output 15

CIRCUIT DIAGRAM

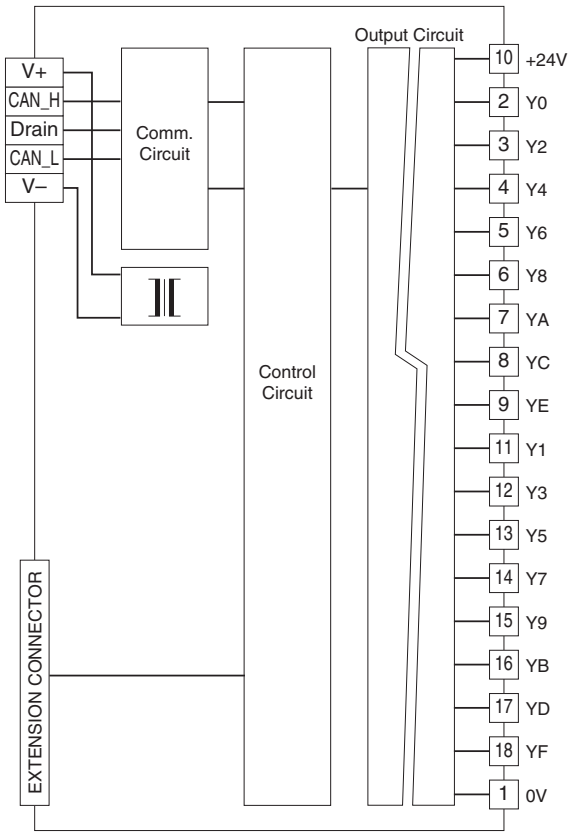

■ **Output Circuit**

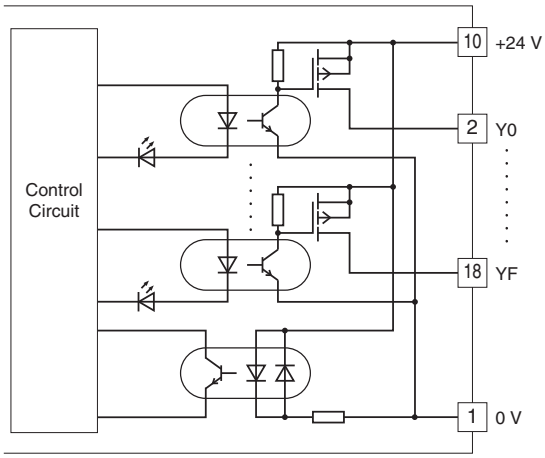

■ **Output Connection Example**

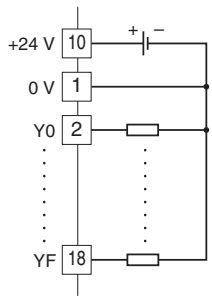

MG CO., LTD.
www.mgco.jp

RELAY CONTACT OUTPUT MODULE, 8 points

MODEL: R7D-DC8C

SPECIFICATIONS

Common: 1 common per 4 points (4 terminals)
Maximum current load: 2.0 A per point
Common current: Max. 8 A (4 terminals)
Number of I/O: Relay contact output, 8 points
Maximum outputs applicable at once: No limit (at 24 V DC)
Output status indicator: LED turns ON with contact ON
Isolation: Output to DeviceNet
Relay driving power: 24 V DC ±10 %, ≥ 60 mA
Rated load: 250 V AC @ 2 A (cos ø = 1)
30 V DC @ 2 A (resistive load)
(When it is used as a product relevant to EU directive, it should be used under the Installation Category I, 125 V AC or less.)
Maximum switching voltage: 250 V AC or 30 V DC
Maximum switching power: 500 VA or 60 W
Minimum load: 24 V DC @5 mA
Mechanical life: 2×10^7 cycles (rate 300/min.)
When driving an inductive load, external contact protection and noise quenching are recommended.
ON delay: ≤ 10 msec.
OFF delay: ≤ 10 msec.

OPERATING MODE SETTING

(*) Factory setting
Note: Be sure to set unused SW1-1 through 1-3 and 1-5 through 1-8 to OFF.

• Output at the Loss of Communication (SW1-4)

SW1-4	Output at the loss of communication
OFF	Reset the output (turned off)
ON	Hold the output (*) (maintains the last data received normally)

TERMINAL ASSIGNMENTS

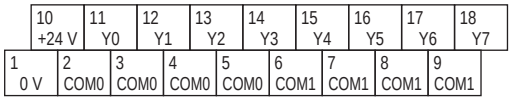

NO.	ID	FUNCTION	NO.	ID	FUNCTION
1	0V	0 V	10	+24V	24 V DC
2	COM0	Common 0	11	Y0	Output 0
3	COM0	Common 0	12	Y1	Output 1
4	COM0	Common 0	13	Y2	Output 2
5	COM0	Common 0	14	Y3	Output 3
6	COM1	Common 1	15	Y4	Output 4
7	COM1	Common 1	16	Y5	Output 5
8	COM1	Common 1	17	Y6	Output 6
9	COM1	Common 1	18	Y7	Output 7

CIRCUIT DIAGRAM

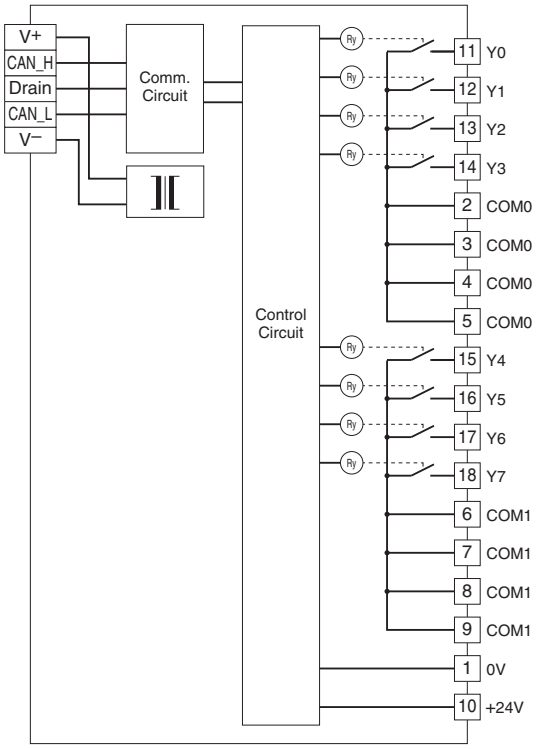

■ **Output Connection Example**

4 points / common

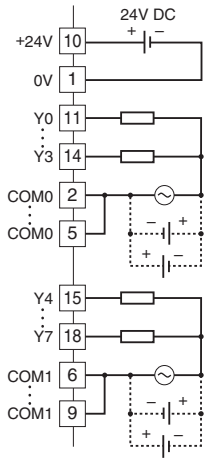

8 points / common

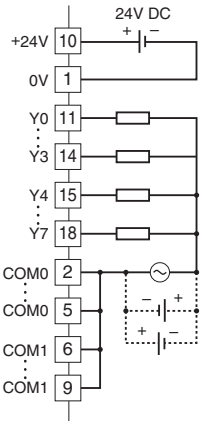

MG CO., LTD.
www.mgco.jp

RELAY CONTACT OUTPUT MODULE, 8 points
(available with extension module)

MODEL: R7D-DC8E

SPECIFICATIONS

Common: 1 common per 4 points (4 terminals)
Maximum current load: 2.0 A per point
Common current: Max. 8 A (4 terminals)
Number of I/O: Relay contact output, 8 points
Maximum outputs applicable at once: No limit (at 24 V DC)
Output status indicator: LED turns ON with contact ON
Isolation: Output to DeviceNet
Relay driving power: 24 V DC ±10 %, ≥ 60 mA
Rated load: 250 V AC* @2 A (cos ø = 1)
30 V DC @2 A (resistive load)
Electrical life 10^5 cycles (rate 30/min.)
*When it is used as a product relevant to EU directive, it should be used under the Installation Category I, 125 V AC or less.
Maximum switching voltage: 250 V AC or 30 V DC
Maximum switching power: 500 VA or 60 W
Minimum load: 24 V DC @5 mA
Mechanical life: 2×10^7 cycles (rate 300/min.)
When driving an inductive load, external contact protection and noise quenching are recommended.
ON delay: ≤ 10 msec.
OFF delay: ≤ 10 msec.

OPERATING MODE SETTING

(*) Factory setting
Note: Be sure to set unused SW1-3 and 1-5 through 1-8 to OFF.

• Output at the Loss of Communication (SW1-4)

SW1-4	Output at the loss of communication
OFF	Reset the output (turned off)
ON	Hold the output (*) (maintains the last data received normally)

• Extension (SW1-1, 1-2)

SW1-1	SW1-2	Extension
OFF	OFF	No extension (*)
ON	OFF	Discrete input, 8 or 16 points
OFF	ON	Discrete output, 8 or 16 points

TERMINAL ASSIGNMENTS

NO.	ID	FUNCTION	NO.	ID	FUNCTION
1	0V	0 V	10	+24V	24 V DC
2	COM0	Common 0	11	Y0	Output 0
3	COM0	Common 0	12	Y1	Output 1
4	COM0	Common 0	13	Y2	Output 2
5	COM0	Common 0	14	Y3	Output 3
6	COM1	Common 1	15	Y4	Output 4
7	COM1	Common 1	16	Y5	Output 5
8	COM1	Common 1	17	Y6	Output 6
9	COM1	Common 1	18	Y7	Output 7

CIRCUIT DIAGRAM

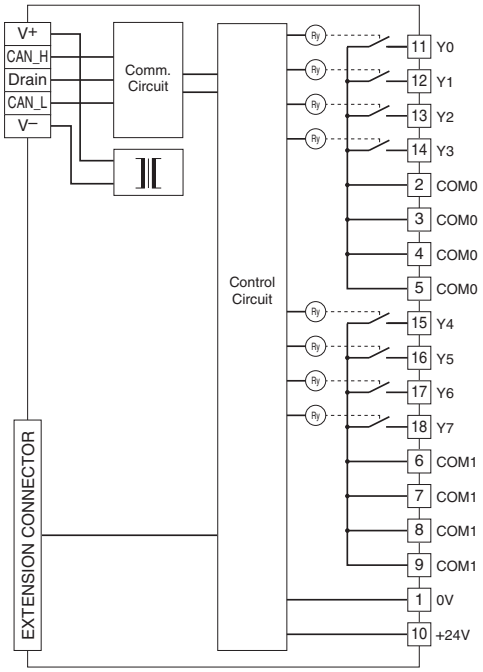

■ **Output Connection Example**

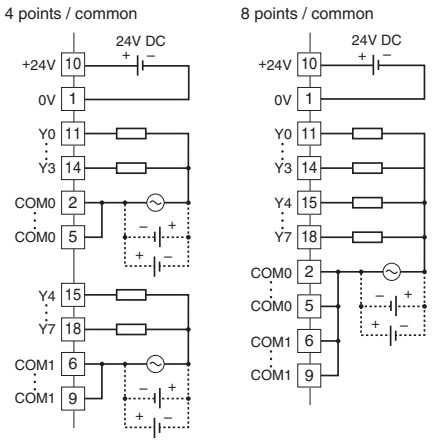

MG CO., LTD.
www.mgco.jp

REMOTE CONTROL RELAY CONTROL MODULE, 8 points

MODEL: R7D-RR8

RECOMMENDED PRODUCTS (OPERATION CHECKED)

Remote control relay:
BR-12D, BR-22D (Mitsubishi Electric)
WR6165 (Panasonic)
Remote control transformer:
BRT-10B, BRT-20B (Mitsubishi Electric)
WR2301 (Panasonic)

SPECIFICATIONS

Common: 1 common per 8 points (8 terminals)
Number of I/O: Output, 8 points
Maximum outputs applicable at once: No limit
I/O status indicator: Feedback input status turns on with the input supplied.
Output status LED turns on with the output ON.
Isolation: Output to DeviceNet
Rated load voltage: 24 V AC ±10 % (supplied by the remote control transformer)
Load voltage frequency: 50 / 60 Hz

OPERATING MODE SETTING

(*) Factory setting
Note: Be sure to set unused SW1-4 through 1-8 to OFF.

• Extension (SW1-1, 1-2)

SW1-1	SW1-2	Extension
OFF	OFF	No extension (*)
ON	OFF	Discrete input, 8 or 16 points
OFF	ON	Discrete output, 8 or 16 points

• Output data length (SW1-3)

SW1-3	Output data length
OFF	16 bits (*)
ON	8 bits

TERMINAL ASSIGNMENTS

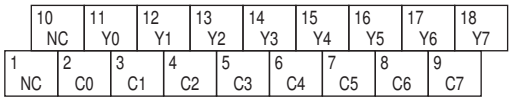

NO.	ID	FUNCTION	NO.	ID	FUNCTION
1	NC	No connection	10	NC	No connection
2	C0	Common 0	11	Y0	Output 0
3	C1	Common 1	12	Y1	Output 1
4	C2	Common 2	13	Y2	Output 2
5	C3	Common 3	14	Y3	Output 3
6	C4	Common 4	15	Y4	Output 4
7	C5	Common 5	16	Y5	Output 5
8	C6	Common 6	17	Y6	Output 6
9	C7	Common 7	18	Y7	Output 7

CIRCUIT DIAGRAM

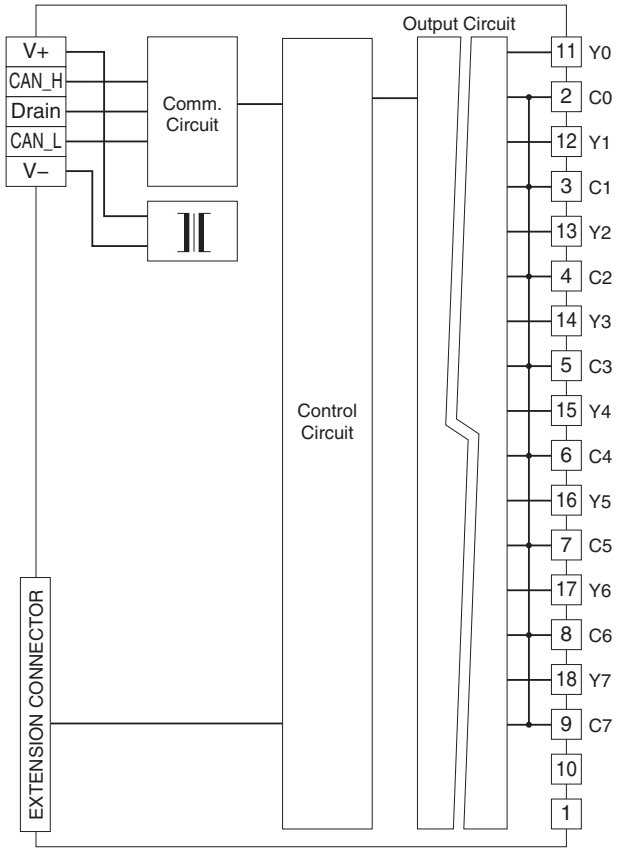

■ **Output Connection Example**

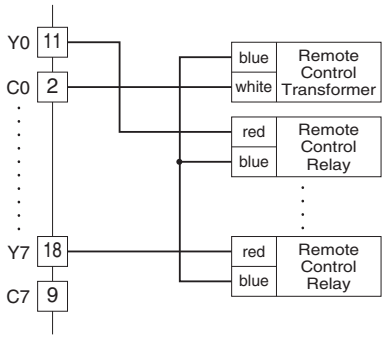

MG CO., LTD.
www.mgco.jp

DC VOLTAGE/CURRENT INPUT MODULE, 4 points

MODEL: R7D-SV4

SPECIFICATIONS

Isolation: Input 0 to input 1 to input 2 to input 3 to DeviceNet

Converted data range: 0 – 10000 of the input range

• **Input range**

Wide span voltage: -10 – +10 V DC, -5 – +5 V DC, 0 – 10 V DC, 0 – 5 V DC, 1 – 5 V DC

Narrow span voltage: -1 – +1 V DC, 0 – 1 V DC, -0.5 – +0.5 V DC

Current range: -20 – +20 mA DC, 0 – 20 mA DC, 4 – 20 mA DC

• **Input resistance**

Wide span voltage: ≥ 1 MΩ

Narrow span voltage: ≥ 100 kΩ

Current range: 70 Ω

Conversion rate / conversion accuracy: 10 msec./±0.8 %, 20 msec./±0.4 %, 40 msec./±0.2 %, 80 msec./±0.1 %

Response time: Conversion rate × 2 + 50 msec. (0 – 90 %)

Temperature coefficient: ±0.015 %/°C (±0.008 %/°F)

OPERATING MODE SETTING

(*) Factory setting

• Input Range (SW1-5, 1-6, 1-7, 1-8)

SW1-5	SW1-6	SW1-7	SW1-8	Input range
OFF	OFF	OFF	OFF	-10 – +10 V DC (*)
ON	OFF	OFF	OFF	-5 – +5 V DC
OFF	ON	OFF	OFF	-1 – +1 V DC
ON	ON	OFF	OFF	0 – 10 V DC
OFF	OFF	ON	OFF	0 – 5 V DC
ON	OFF	ON	OFF	1 – 5 V DC
OFF	ON	ON	OFF	0 – 1V DC
ON	ON	ON	OFF	-0.5 – +0.5 V DC
ON	OFF	OFF	ON	-20 – +20 mA DC
OFF	ON	OFF	ON	4 – 20 mA DC
ON	ON	OFF	ON	0 – 20 mA DC
ON	ON	ON	ON	PC Configurator setting

• Conversion Rate / Accuracy (SW1-3, 1-4)

SW1-3	SW1-4	Conversion rate / Accuracy
OFF	OFF	80 msec. / ±0.1% (*)
ON	OFF	40 msec. / ±0.2%
OFF	ON	20 msec. / ±0.4%
ON	ON	10 msec. / ±0.8%

• Extension (SW1-1, 1-2)

SW1-1	SW1-2	Extension
OFF	OFF	No extension (*)
ON	OFF	Discrete input, 8 or 16 points
OFF	ON	Discrete output, 8 or 16 points

TERMINAL ASSIGNMENTS

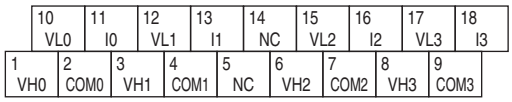

NO.	ID	FUNCTION	NO.	ID	FUNCTION
1	VH0	Wide span volt. 0	10	VL0	Narrow span volt. 0
2	COM0	Common 0	11	I0	Current range 0
3	VH1	Wide span volt. 1	12	VL1	Narrow span volt. 1
4	COM1	Common 1	13	I1	Current range 1
5	NC	No connection	14	NC	No connection
6	VH2	Wide span volt. 2	15	VL2	Narrow span volt. 2
7	COM2	Common 2	16	I2	Current range 2
8	VH3	Wide span volt. 3	17	VL3	Narrow span volt. 3
9	COM3	Common 3	18	I3	Current range 3

CIRCUIT DIAGRAM

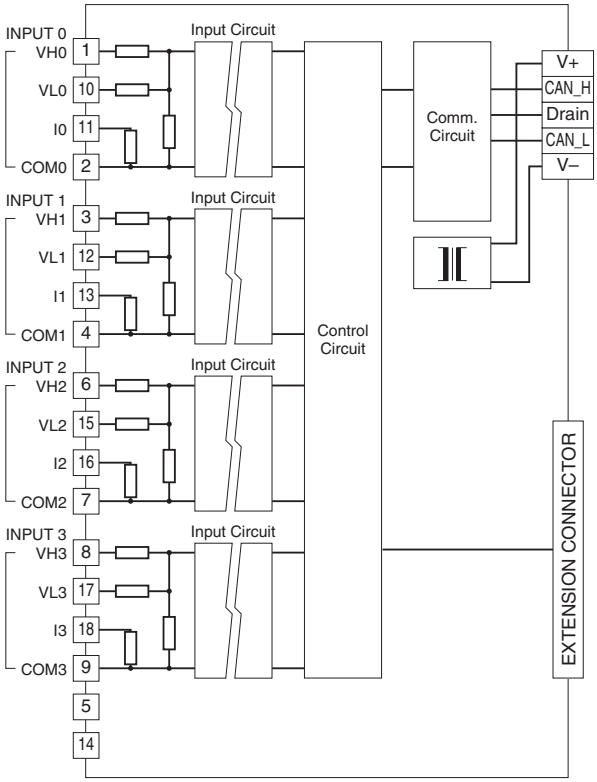

■ **Input Connection Examples**

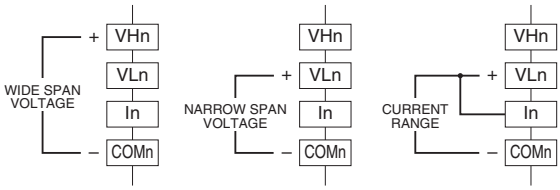

Be sure to close across VLn and In terminals for a current input.

MG CO., LTD.
www.mgco.jp

THERMOCOUPLE INPUT MODULE, 4 points

MODEL: R7D-TS4

SPECIFICATIONS

Isolation: Input 0 to input 1 to input 2 to input 3 to DeviceNet
Converted data range: Engineering unit value (°C, K) × 10 (integer); No multiplication for °F
Linearization: Standard
Thermocouple: K, E, J, T, B, R, S, C, N, U, L, P, PR
Cold junction compensation: CJC sensor attached to the input terminals
Input resistance: ≥ 30 kΩ
Burnout sensing: ≤ 0.1 μA
Conversion accuracy: ±1°C (±1.8°F);
±2.0°C (±3.6°F) for B, R, S, C, PR
Conversion rate: 250 msec. or 500 msec.
Response time: Conversion rate × 2 + 50 msec. (0 – 90 %)
Temperature coefficient: ±0.015 %/°C (±0.008 %/°F) of max. span
CJC error: ±1.0°C at 25°C ±10°C
(±1.8°F at 77°F ±18°F)
±1.5°C (±2.7°F) for R, S, PR

T/C	BURNOUT INDICATION (°C)		CONFORMANCE RANGE (°C)
	Downscale	Upscale	
K (CA)	-272	+1472	-150 to +1370
E (CRC)	-272	+1120	-170 to +1000
J (IC)	-260	+1300	-180 to +1200
T (CC)	-272	+ 500	-170 to + 400
B (RH)	24	1920	1000 to 1760
R	-100	+1860	380 to 1760
S	-100	+1860	400 to 1760
C (WRe 5-26)	-52	+2416	100 to 2315
N	-272	+1400	-130 to +1300
U	-252	+ 700	-200 to +600
L	-252	+1000	-200 to +900
P (Platinel II)	-52	+1496	0 to 1395
(PR)	-52	+1860	300 to 1760

T/C	BURNOUT INDICATION (°F)		CONFORMANCE RANGE (°F)
	Downscale	Upscale	
K (CA)	-458	+2682	-238 to +2498
E (CRC)	-458	+2048	-274 to +1832
J (IC)	-436	+2372	-292 to +2192
T (CC)	-458	+932	-274 to +752
B (RH)	75	3488	1832 to 3200
R	-148	+3380	716 to 3200
S	-148	+3380	752 to 3200
C (WRe 5-26)	-62	+4381	212 to 4199
N	-458	+2552	-202 to +2372
U	-422	+1292	-328 to +1112
L	-422	+1832	-328 to +1652
P (Platinel II)	-62	+2725	32 to 2543
(PR)	-62	+3380	572 to 3200

OPERATING MODE SETTING

(*) Factory setting

• Thermocouple Type (SW1-5, 1-6, 1-7, 1-8)

SW1-5	SW1-6	SW1-7	SW1-8	Thermocouple type
OFF	OFF	OFF	OFF	K (CA) (*)
ON	OFF	OFF	OFF	E (CRC)
OFF	ON	OFF	OFF	J (IC)
ON	ON	OFF	OFF	T (CC)
OFF	OFF	ON	OFF	B (RH)
ON	OFF	ON	OFF	R
OFF	ON	ON	OFF	S
ON	ON	ON	OFF	C (WRe 5-26)
OFF	OFF	OFF	ON	N
ON	OFF	OFF	ON	U
OFF	ON	OFF	ON	L
ON	ON	OFF	ON	P (Platinel II)
OFF	OFF	ON	ON	(PR)
ON	ON	ON	ON	PC Configurator setting

• Conversion Rate (SW1-3)

SW1-3	Conversion rate
OFF	250 msec. (*)
ON	500 msec.

• Burnout (SW1-4)

SW1-4	Burnout
OFF	Upscale (*)
ON	Downscale

• Extension (SW1-1, 1-2)

SW1-1	SW1-2	Extension
OFF	OFF	No extension (*)
ON	OFF	Discrete input, 8 or 16 points
OFF	ON	Discrete output, 8 or 16 points

TERMINAL ASSIGNMENTS

10 +IN0	11 –IN0	12 +IN1	13 –IN1	14 NC	15 +IN2	16 –IN2	17 +IN3	18 –IN3
1 +CJ0	2 –CJ0	3 +CJ1	4 –CJ1	5 NC	6 +CJ2	7 –CJ2	8 +CJ3	9 –CJ3

NO.	ID	FUNCTION	NO.	ID	FUNCTION
1	+CJ0	CJC + 0	10	+IN0	T/C + 0
2	–CJ0	CJC – 0	11	–IN0	T/C – 0
3	+CJ1	CJC + 1	12	+IN1	T/C + 1
4	–CJ1	CJC – 1	13	–IN1	T/C – 1
5	NC	No connection	14	NC	No connection
6	+CJ2	CJC + 2	15	+IN2	T/C + 2
7	–CJ2	CJC – 2	16	–IN2	T/C – 2
8	+CJ3	CJC + 3	17	+IN3	T/C + 3
9	–CJ3	CJC – 3	18	–IN3	T/C – 3

MG CO., LTD.
www.mgco.jp

CIRCUIT DIAGRAM

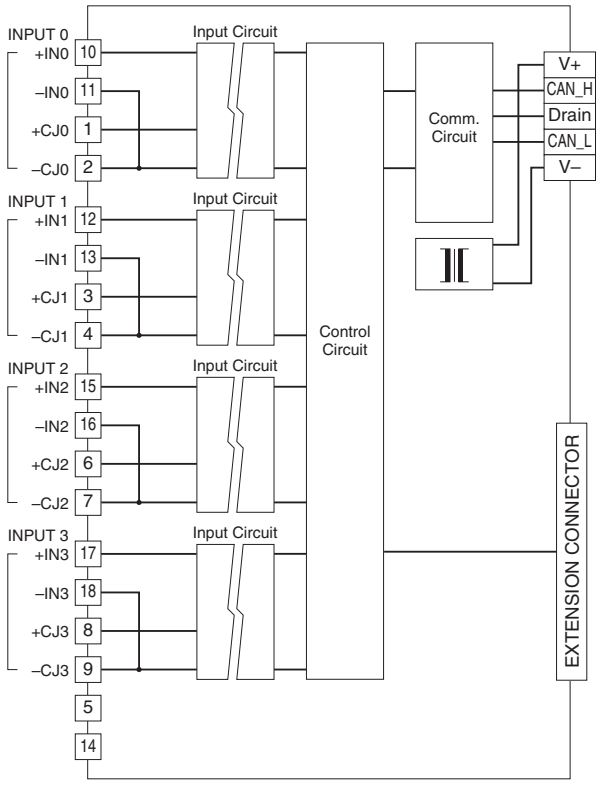

■ **Input Connection Example**

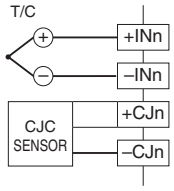

RTD INPUT MODULE, 4 points

MODEL: R7D-RS4

SPECIFICATIONS

Isolation: Input 0 to input 1 to input 2 to input 3 to DeviceNet
Converted data range: Engineering unit value (°C, K) × 10 (integer); No multiplication for °F
Linearization: Standard
RTD: Pt 100 (JIS '97, IEC), Pt 100 (JIS '89), JPt 100 (JIS '89), Pt 50 Ω (JIS '81), Ni 100, Cu 10, Cu 50
Sensing current: ≤ 1 mA
Input resistance: ≥ 1 MΩ
Maximum leadwire resistance: 100 Ω per wire
Conversion accuracy: ±1°C (±1.8°F);
±3°C (±5.4°F) for Cu 10
Conversion rate: 250 msec. or 500 msec.
Response time: Conversion rate × 2 + 50 msec. (0 – 90 %)
Temperature coefficient: ±0.015 %/°C (±0.008 %/°F) of max. span

RTD	BURNOUT INDICATION (°C)		CONFORMANCE RANGE (°C)
	Downscale	Upscale	
Pt 100 (JIS '97, IEC)	-240	+900	-200 to +850
Pt 100 (JIS '89)	-240	+900	-200 to +660
JPt 100 (JIS '89)	-236	+560	-200 to +510
Pt 50 Ω (JIS '81)	-236	+700	-200 to +649
Ni 100	-100	+252	-80 to +250
Cu 10 @ 25°C	-212	+312	-50 to +250
Cu 50	-100	+200	-50 to +150

RTD	BURNOUT INDICATION (°F)		CONFORMANCE RANGE (°F)
	Downscale	Upscale	
Pt 100 (JIS '97, IEC)	-400	+1652	-328 to +1562
Pt 100 (JIS '89)	-400	+1652	-328 to +1220
JPt 100 (JIS '89)	-393	+1040	-328 to +950
Pt 50 Ω (JIS '81)	-393	+1292	-328 to +1200
Ni 100	-148	+486	-112 to +482
Cu 10 @ 25°C	-350	+594	-58 to +482
Cu 50	-148	+392	-58 to +302

OPERATING MODE SETTING

(*) Factory setting

• RTD Type (SW1-5, 1-6, 1-7, 1-8)

SW1-5	SW1-6	SW1-7	SW1-8	RTD Type
OFF	OFF	OFF	OFF	Pt 100 (JIS '97, IEC) (*)
ON	OFF	OFF	OFF	Pt 100 (JIS '89)
OFF	ON	OFF	OFF	JPt 100 (JIS '89)
ON	ON	OFF	OFF	Pt 50 Ω (JIS '81)
OFF	OFF	ON	OFF	Ni 100
ON	OFF	ON	OFF	Cu 10 @ 25°C
OFF	OFF	OFF	ON	Cu 50
ON	ON	ON	ON	PC Configurator setting

• Conversion Rate (SW1-3)

SW1-3	Conversion rate
OFF	250 msec. (*)
ON	500 msec.

• Burnout (SW1-4)

SW1-4	Burnout
OFF	Upscale (*)
ON	Downscale

• Extension (SW1-1, 1-2)

SW1-1	SW1-2	Extension
OFF	OFF	No extension (*)
ON	OFF	Discrete input, 8 or 16 points
OFF	ON	Discrete output, 8 or 16 points

TERMINAL ASSIGNMENTS

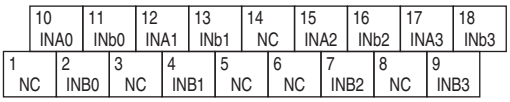

NO.	ID	FUNCTION	NO.	ID	FUNCTION
1	NC	No connection	10	INA0	RTD 0-A
2	INB0	RTD 0-B	11	INb0	RTD 0-b
3	NC	No connection	12	INA1	RTD 1-A
4	INB1	RTD 1-B	13	INb1	RTD 1-b
5	NC	No connection	14	NC	No connection
6	NC	No connection	15	INA2	RTD 2-A
7	INB2	RTD 2-B	16	INb2	RTD 2-b
8	NC	No connection	17	INA3	RTD 3-A
9	INB3	RTD 3-B	18	INb3	RTD 3-b

MG CO., LTD.
www.mgco.jp

CIRCUIT DIAGRAM

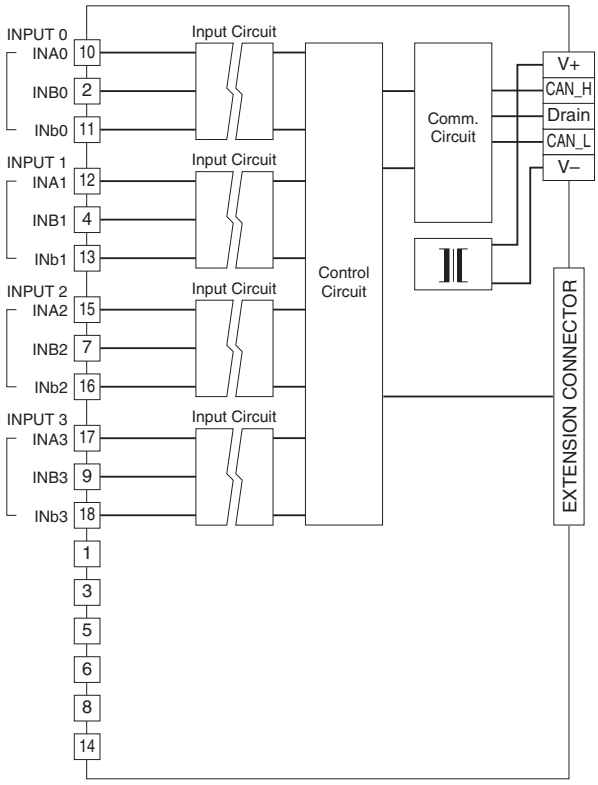

■ **Input Connection Example**

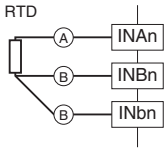

POTENTIOMETER INPUT MODULE, 4 points

MODEL: R7D-MS4

SPECIFICATIONS

Isolation: Input 0 to input 1 to input 2 to input 3 to DeviceNet
Converted data range: 0 – 10000 of the input range
Potentiometer: Total resistance 100 Ω – 20 kΩ
Minimum span: 50 % of total resistance
Excitation: Approx. 0.2 V DC
Conversion rate / conversion accuracy:
10 msec./±0.8 %, 20 msec./±0.4 %, 40 msec./±0.2 %, 80 msec./±0.1 %
Response time: Conversion rate × 2 + 50 msec. (0 – 90 %)
Temperature coefficient: ±0.015 %/°C (±0.008 %/°F)

OPERATING MODE SETTING

(*) Factory setting
Note: Be sure to set unused SW1-5 through 1-8 to OFF.

• Conversion Rate / Accuracy (SW1-3, 1-4)

SW1-3	SW1-4	Conversion rate / Accuracy
OFF	OFF	80 msec. / ±0.1% (*)
ON	OFF	40 msec. / ±0.2%
OFF	ON	20 msec. / ±0.4%
ON	ON	10 msec. / ±0.8%

• Extension (SW1-1, 1-2)

SW1-1	SW1-2	Extension
OFF	OFF	No extension (*)
ON	OFF	Discrete input, 8 or 16 points
OFF	ON	Discrete output, 8 or 16 points

TERMINAL ASSIGNMENTS

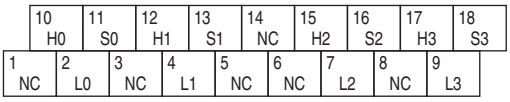

NO.	ID	FUNCTION	NO.	ID	FUNCTION
1	NC	No connection	10	H0	Pot H0
2	L0	Pot L0	11	S0	Pot S0
3	NC	No connection	12	H1	Pot H1
4	L1	Pot L1	13	S1	Pot S1
5	NC	No connection	14	NC	No connection
6	NC	No connection	15	H2	Pot H2
7	L2	Pot L2	16	S2	Pot S2
8	NC	No connection	17	H3	Pot H3
9	L3	Pot L3	18	S3	Pot S3

CIRCUIT DIAGRAM

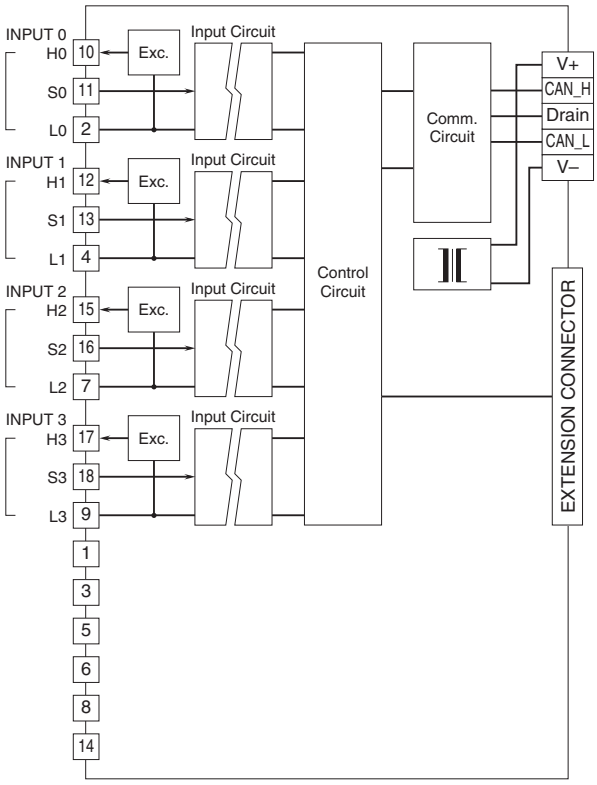

■ **Input Connection Example**

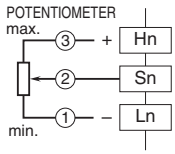

MG CO., LTD.
www.mgco.jp

AC CURRENT INPUT MODULE, 4 points

(clamp-on current sensor CLSE use)

MODEL: R7D-CT4E

SPECIFICATIONS

Isolation: Input 0 to input 1 to input 2 to input 3 to DeviceNet

Converted data range:
Engineering unit value (A) × 100 (Integer)
(Engineering unit value (A) × 1000 (Integer) for CLSE-R5)

Input range (Optional)
CLSE-R5: 0 – 5 A AC
CLSE-05: 0 – 50 A AC
CLSE-10: 0 – 100 A AC
CLSE-20: 0 – 200 A AC
CLSE-40: 0 – 400 A AC
CLSE-60: 0 – 600 A AC

Frequency: 50/60 Hz

Overload capacity: 120 % continuous

Operational range: 5 – 115 % of rating (Operational range for the CLSE-60 is limited up to approx. 109 % (65535).)
(Note: Use for the circuit not exceed 480 V)

Conversion rate / conversion accuracy:
10 msec./±2.0 %, 20 msec./±1.0 %, 40 msec./±0.5 %, 80 msec./±0.5 %
(The conversion accuracy does not include the accuracy of the sensor.)

Response time: ≤ 1.0 sec. (0 – 90 %)

Temperature coefficient: ±0.015 %/°C (±0.008 %/°F)

OPERATING MODE SETTING

(*) Factory setting

• Input Range (SW1-5, 1-6, 1-7, 1-8)

SW1-5	SW1-6	SW1-7	SW1-8	Input range
OFF	OFF	OFF	OFF	CLSE-60 (*)
ON	OFF	OFF	OFF	CLSE-40
OFF	ON	OFF	OFF	CLSE-20
ON	ON	OFF	OFF	CLSE-10
OFF	OFF	ON	OFF	CLSE-05
ON	OFF	ON	OFF	CLSE-R5
ON	ON	ON	ON	PC Configurator setting

• Conversion Rate / Accuracy (SW1-3, 1-4)

SW1-3	SW1-4	Conversion rate / Accuracy
OFF	OFF	80 msec. / ±0.5% (*)
ON	OFF	40 msec. / ±0.5%
OFF	ON	20 msec. / ±1.0%
ON	ON	10 msec. / ±2.0%

• Extension (SW1-1, 1-2)

SW1-1	SW1-2	Extension
OFF	OFF	No extension (*)
ON	OFF	Discrete input, 8 or 16 points
OFF	ON	Discrete output, 8 or 16 points

TERMINAL ASSIGNMENTS

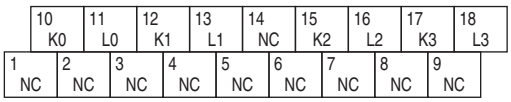

NO.	ID	FUNCTION	NO.	ID	FUNCTION
1	NC	No connection	10	K0	AC current K0
2	NC	No connection	11	L0	AC current L0
3	NC	No connection	12	K1	AC current K1
4	NC	No connection	13	L1	AC current L1
5	NC	No connection	14	NC	No connection
6	NC	No connection	15	K2	AC current K2
7	NC	No connection	16	L2	AC current L2
8	NC	No connection	17	K3	AC current K3
9	NC	No connection	18	L3	AC current L3

CIRCUIT DIAGRAM

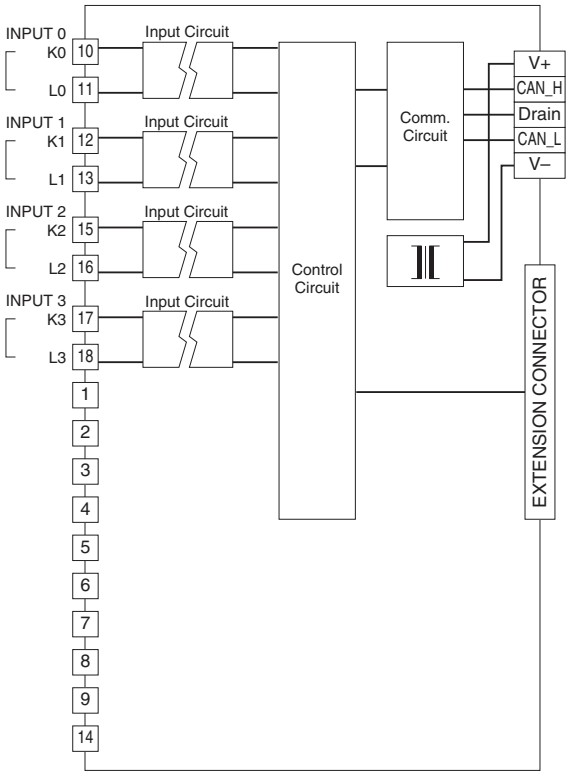

■ **Input Connection Example**

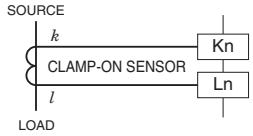

MG CO., LTD.
www.mgco.jp

TOTALIZED PULSE INPUT MODULE, 8 points

MODEL: R7D-PA8

SPECIFICATIONS

Common: Positive or negative common (NPN/PNP) per 8 points
Number of I/O: Input, 8 points
Input status indicator: LED turns ON with contact ON
Isolation: Input to DeviceNet
■ **External excitation (PNP, NPN input)**
Sensing voltage: 24 V DC ±10 %; ripple 5 %p-p max
ON voltage / ON current: ≥ 16 V DC (input terminal - Cx) / ≤ 3.7 mA
OFF voltage / OFF current: ≤ 5 V DC (input terminal - Cx) / ≤ 1 mA
Voltage pulse input
ON voltage / ON current: ≥ 16 V DC (input terminal - Cx) / ≤ 3.7 mA
OFF voltage / OFF current: ≤ 5 V DC (input terminal - Cx) / ≤ 1 mA
Input current: ≤ 5.5 mA per point at 24 V DC
Input resistance: Approx. 4.4 kΩ
ON delay: ≤ 2.0 msec.
OFF delay: ≤ 2.0 msec.
Max. Frequency: 100 Hz (This unit is designed to be able to accept a frequency up to 100 Hz, however,'chattering' contact must be avoided for accurate measuring of such high frequency. Use relays that do not cause any chattering.)
Minimum ON/OFF pulse requirements: 5 msec.
Accumulated pulse count: 0 - 4 294 967 295
Max. accumulated pulse count: 1 000 - 4 294 967 295 (Factory default: 9 999 999)
Overflow: 0 or 1 (Factory default: 0)

OPERATING MODE SETTING

(*) Factory setting
Note: Be sure to set unused SW1-3 through 1-8 to OFF.

• Extension (SW1-1, 1-2)

SW1-1	SW1-2	Extension
OFF	OFF	No extension (*)
ON	OFF	Discrete input, 8 or 16 points
OFF	ON	Discrete output, 8 or 16 points

TERMINAL ASSIGNMENTS

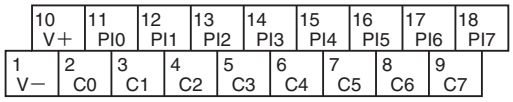

NO.	ID	FUNCTION	NO.	ID	FUNCTION
1	V –	Power (–)	10	V +	Power (+)
2	C0	Common	11	PI0	Input 0
3	C1	Common	12	PI1	Input 1
4	C2	Common	13	PI2	Input 2
5	C3	Common	14	PI3	Input 3
6	C4	Common	15	PI4	Input 4
7	C5	Common	16	PI5	Input 5
8	C6	Common	17	PI6	Input 6
9	C7	Common	18	PI7	Input 7

MG CO., LTD.
www.mgco.jp

CIRCUIT DIAGRAM

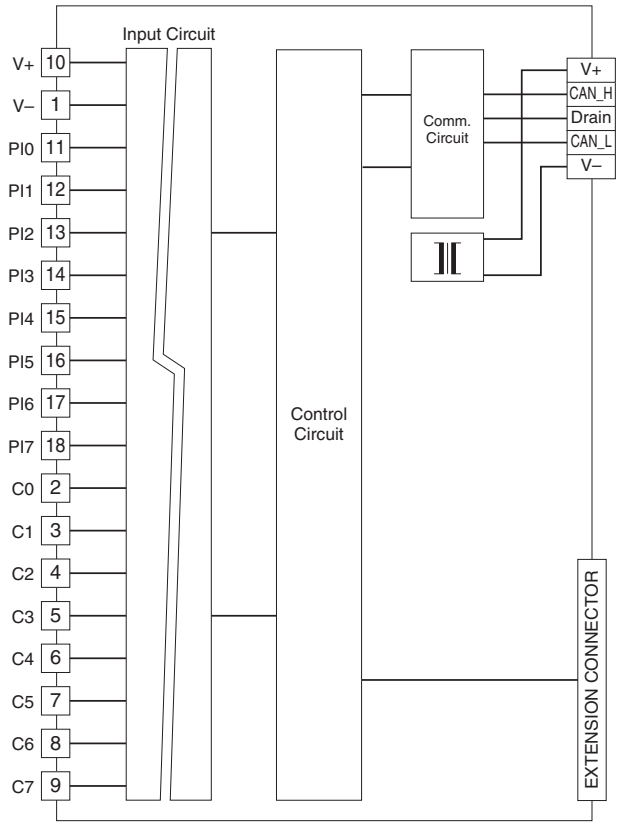

■ **Input Circuit**

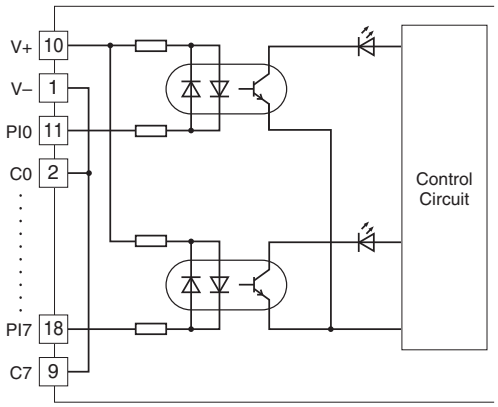

■ **Input Connection Examples**

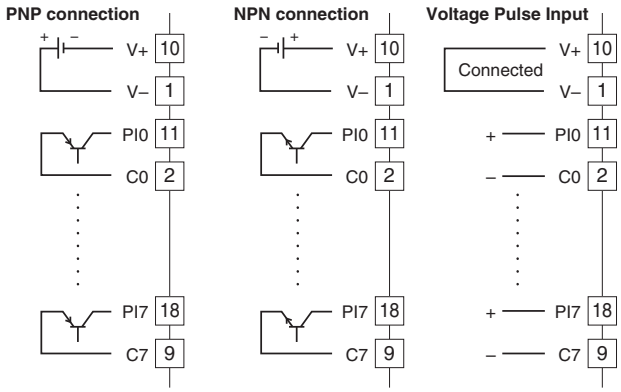

DC VOLTAGE OUTPUT MODULE, 2 points

MODEL: R7D-YV2

SPECIFICATIONS

Isolation: Output 0 to output 1 to DeviceNet
Converted data range: 0 – 10000 of the output range
Output range
Wide span voltage: -10 – +10 V DC, -5 – +5 V DC, 0 – 10 V DC, 0 – 5 V DC, 1 – 5 V DC
Narrow span voltage: -1 – +1 V DC, 0 – 1 V DC, -0.5 – +0.5 V DC
Operational range: -15 – +115 % of the output range (except -10 – +10 V DC);
approx. -11.5 – +11.5 V DC (-10 – +10 V DC)
Load resistance: ≥ 100 kΩ
Conversion accuracy: ±0.1 %
Response time: 250 msec. (0 – 90 %)
Temperature coefficient: ±0.015 %/°C (±0.008 %/°F)

OPERATING MODE SETTING

(*) Factory setting
Note: Be sure to set unused SW1-3 to OFF.

• Output Range (SW1-5, 1-6, 1-7, 1-8)

SW1-5	SW1-6	SW1-7	SW1-8	Output range
OFF	OFF	OFF	OFF	-10 – +10 V DC (*)
ON	OFF	OFF	OFF	-5 – +5 V DC
OFF	ON	OFF	OFF	-1 – +1 V DC
ON	ON	OFF	OFF	0 – 10 V DC
OFF	OFF	ON	OFF	0 – 5 V DC
ON	OFF	ON	OFF	1 – 5 V DC
OFF	ON	ON	OFF	0 – 1 V DC
ON	ON	ON	OFF	-0.5 – +0.5 V DC
ON	ON	ON	ON	PC Configurator setting

• Output at the Loss of Communication (SW1-4)

SW1-4	Output at the loss of communication
OFF	Reset the output (to -15% or approx. -11.5V DC)
ON	Hold the output (*) (maintains the last data received normally)

• Extension (SW1-1, 1-2)

SW1-1	SW1-2	Extension
OFF	OFF	No extension (*)
ON	OFF	Discrete input, 8 or 16 points
OFF	ON	Discrete output, 8 or 16 points

TERMINAL ASSIGNMENTS

NO.	ID	FUNCTION	NO.	ID	FUNCTION
1	NC	No connection	6	NC	No connection
2	COM0	Common 0	7	VH0	Wide span volt. 0
3	COM0	Common 0	8	VL0	Narrow span volt. 0
4	COM1	Common 1	9	VH1	Wide span volt. 1
5	COM1	Common 1	10	VL1	Narrow span volt. 1

CIRCUIT DIAGRAM

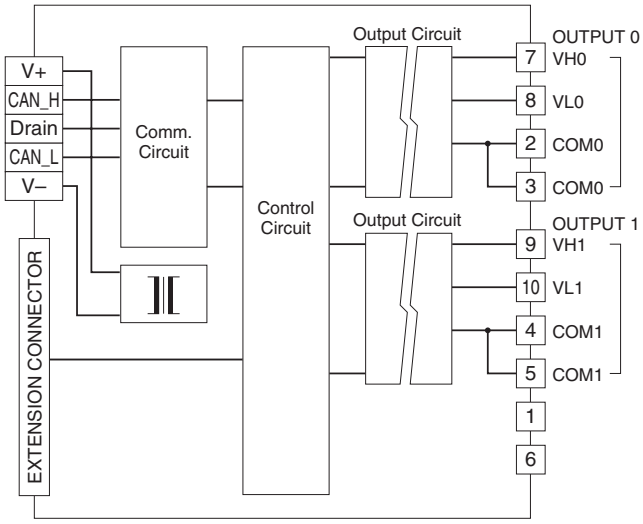

■ **Output Connection Examples**

MG CO., LTD.
www.mgco.jp

DC VOLTAGE OUTPUT MODULE, 2 points
(external power supply)

MODEL: R7D-YV2A

SPECIFICATIONS

Isolation: Output 0 to output 1 to DeviceNet to external power supply
Converted data range: 0 – 10000 of the output range
Output range
Wide span voltage: -10 – +10 V DC, -5 – +5 V DC, 0 – 10 V DC, 0 – 5 V DC, 1 – 5 V DC
Narrow span voltage: -1 – +1 V DC, 0 – 1 V DC, -0.5 – +0.5 V DC
Operational range: -15 – +115 % of the output range (except -10 – +10 V DC);
approx. -11.5 – +11.5 V DC (-10 – +10 V DC)
Load resistance: ≥ 100 kΩ
Supply output: 24 V DC ±10 %, ≥ 40 mA
Conversion accuracy: ±0.1 %
Response time: 250 msec. (0 – 90 %)
Temperature coefficient: ±0.015 %/°C (±0.008 %/°F)

OPERATING MODE SETTING

(*) Factory setting
Note: Be sure to set unused SW1-3 to OFF.

• Output Range (SW1-5, 1-6, 1-7, 1-8)

SW1-5	SW1-6	SW1-7	SW1-8	Output range
OFF	OFF	OFF	OFF	-10 – +10 V DC (*)
ON	OFF	OFF	OFF	-5 – +5 V DC
OFF	ON	OFF	OFF	-1 – +1 V DC
ON	ON	OFF	OFF	0 – 10 V DC
OFF	OFF	ON	OFF	0 – 5 V DC
ON	OFF	ON	OFF	1 – 5 V DC
OFF	ON	ON	OFF	0 – 1 V DC
ON	ON	ON	OFF	-0.5 – +0.5 V DC
ON	ON	ON	ON	PC Configurator setting

• Output at the Loss of Communication (SW1-4)

SW1-4	Output at the loss of communication
OFF	Reset the output (to -15% or approx. -11.5V DC)
ON	Hold the output (*) (maintains the last data received normally)

• Extension (SW1-1, 1-2)

SW1-1	SW1-2	Extension
OFF	OFF	No extension (*)
ON	OFF	Discrete input, 8 or 16 points
OFF	ON	Discrete output, 8 or 16 points

TERMINAL ASSIGNMENTS

NO.	ID	FUNCTION	NO.	ID	FUNCTION
1	0V	0V	6	+24V	24V DC
2	COM0	Common 0	7	VH0	Wide span volt. 0
3	COM0	Common 0	8	VL0	Narrow span volt. 0
4	COM1	Common 1	9	VH1	Wide span volt. 1
5	COM1	Common 1	10	VL1	Narrow span volt. 1

CIRCUIT DIAGRAM

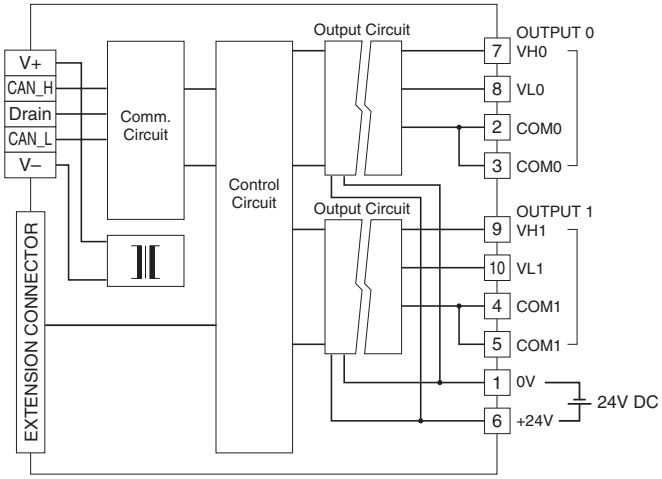

■ **Output Connection Examples**

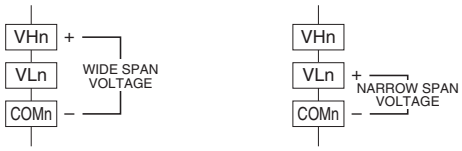

MG CO., LTD.
www.mgco.jp

DC CURRENT OUTPUT MODULE, 2 points

MODEL: R7D-YS2

SPECIFICATIONS

Isolation: Output 0 to output 1 to DeviceNet
Converted data range: 0 – 10000 of the output range
Output range: 4 – 20 mA DC
Load resistance: ≤ 600Ω
Conversion accuracy: ±0.1 %
Response time: 250 msec. (0 – 90 %)
Temperature coefficient: ±0.015 %/°C (±0.008 %/°F)

OPERATING MODE SETTING

(*) Factory setting
Note: Be sure to set unused SW1-3 and 1-5 through 1-8 to OFF.

• Output at the Loss of Communication (SW1-4)

SW1-4	Output at the loss of communication
OFF	Reset the output (to -15%)
ON	Hold the output (*) (maintains the last data received normally)

• Extension (SW1-1, 1-2)

SW1-1	SW1-2	Extension
OFF	OFF	No extension (*)
ON	OFF	Discrete input, 8 or 16 points
OFF	ON	Discrete output, 8 or 16 points

TERMINAL ASSIGNMENTS

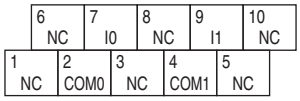

NO.	ID	FUNCTION	NO.	ID	FUNCTION
1	NC	No connection	6	NC	No connection
2	COM0	Common 0	7	I0	Current 0
3	NC	No connection	8	NC	No connection
4	COM1	Common 1	9	I1	Current 1
5	NC	No connection	10	NC	No connection

CIRCUIT DIAGRAM

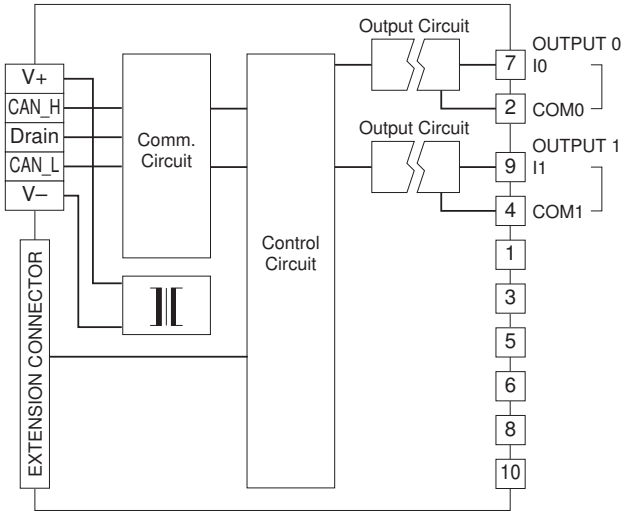

MG CO., LTD.
www.mgco.jp

DC CURRENT OUTPUT MODULE, 2 points

(external power supply)

MODEL: R7D-YS2A

SPECIFICATIONS

Isolation: Output 0 to output 1 to DeviceNet to external power supply
Converted data range: 0 – 10000 of the output range
Output range: 4 – 20 mA DC
Load resistance: ≤ 600Ω
Supply output: 24 V DC ±10 %, ≥ 70 mA
Conversion accuracy: ±0.1 %
Response time: 250 msec. (0 – 90 %)
Temperature coefficient: ±0.015 %/°C (±0.008 %/°F)

OPERATING MODE SETTING

(*) Factory setting
Note: Be sure to set unused SW1-3 and 1-5 through 1-8 to OFF.

• Output at the Loss of Communication (SW1-4)

SW1-4	Output at the loss of communication
OFF	Reset the output (to -15%)
ON	Hold the output (*) (maintains the last data received normally)

• Extension (SW1-1, 1-2)

SW1-1	SW1-2	Extension
OFF	OFF	No extension (*)
ON	OFF	Discrete input, 8 or 16 points
OFF	ON	Discrete output, 8 or 16 points

TERMINAL ASSIGNMENTS

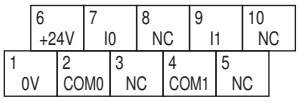

NO.	ID	FUNCTION	NO.	ID	FUNCTION
1	0V	0V	6	+24V	24V DC
2	COM0	Common 0	7	I0	Current 0
3	NC	No connection	8	NC	No connection
4	COM1	Common 1	9	I1	Current 1
5	NC	No connection	10	NC	No connection

CIRCUIT DIAGRAM

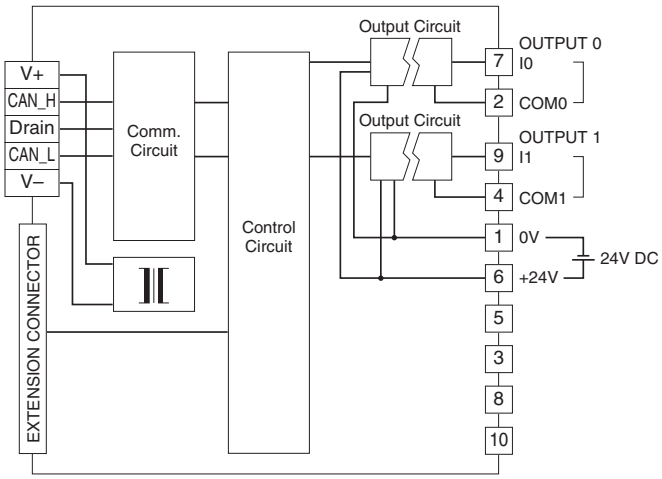

MG CO., LTD.
www.mgco.jp

DISCRETE INPUT EXTENSION MODULE, 8 points

MODEL: R7D-EA8

SPECIFICATIONS

Common: Positive or negative common (NPN/PNP) per 8 points
Number of I/O: Input, 8 points
Maximum inputs applicable at once: No limit (at 24 V DC)
Input status indicator: LED turns ON with contact ON
Isolation: Input to internal circuits
Rated input voltage: 24 V DC ±10 %; ripple 5 %p-p max.
ON voltage/current: ≥ 15 V DC (input-COM1) / ≥ 3.5 mA
OFF voltage/current: ≤ 5 V DC (input-COM1) / ≤ 1 mA
Input current: ≤ 5.5 mA per point at 24 V DC
Input resistance: Approx. 4.4 kΩ
ON delay: ≤ 2.0 msec.
OFF delay: ≤ 2.0 msec.

TERMINAL ASSIGNMENTS

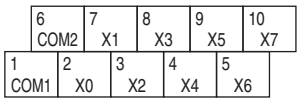

NO.	ID	FUNCTION	NO.	ID	FUNCTION
1	COM1	Common 1	6	COM2	Common 2
2	X0	Input 0	7	X1	Input 1
3	X2	Input 2	8	X3	Input 3
4	X4	Input 4	9	X5	Input 5
5	X6	Input 6	10	X7	Input 7

CIRCUIT DIAGRAM

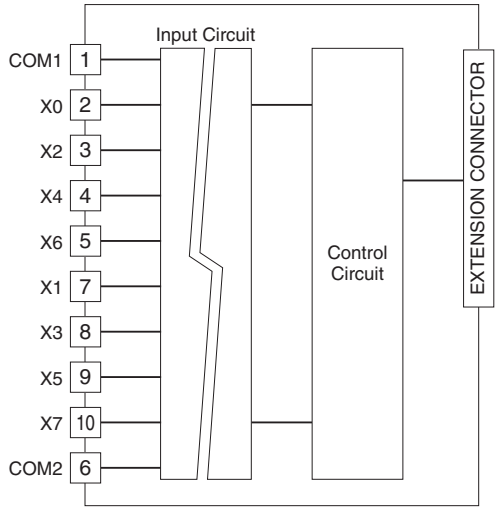

■ **Input Circuit**

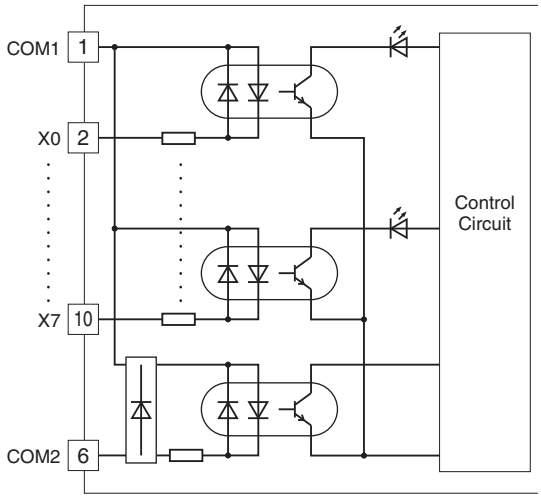

■ **Input Connection Examples**

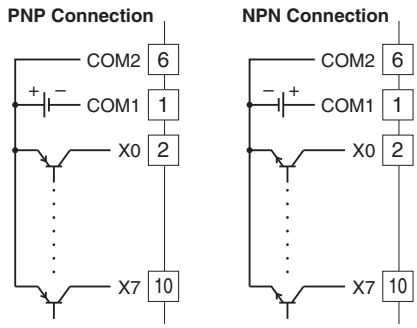

MG CO., LTD.
www.mgco.jp

DISCRETE INPUT EXTENSION MODULE, 16 points

MODEL: R7D-EA16

SPECIFICATIONS

Common: Positive or negative common (NPN/PNP) per 16 points
Number of I/O: Input, 16 points
Maximum inputs applicable at once: No limit (at 24 V DC)
Input status indicator: LED turns ON with contact ON
Isolation: Input to internal circuits
Rated input voltage: 24 V DC ±10 %; ripple 5 %p-p max.
ON voltage/current: ≥ 15 V DC (input-COM1) / ≥ 3.5 mA
OFF voltage/current: ≤ 5 V DC (input-COM1) / ≤ 1 mA
Input current: ≤ 5.5 mA per point at 24 V DC
Input resistance: Approx. 4.4 kΩ
ON delay: ≤ 2.0 msec.
OFF delay: ≤ 2.0 msec.

TERMINAL ASSIGNMENTS

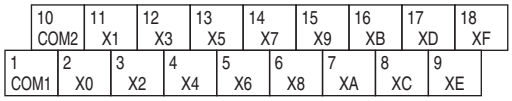

NO.	ID	FUNCTION	NO.	ID	FUNCTION
1	COM1	Common 1	10	COM2	Common 2
2	X0	Input 0	11	X1	Input 1
3	X2	Input 2	12	X3	Input 3
4	X4	Input 4	13	X5	Input 5
5	X6	Input 6	14	X7	Input 7
6	X8	Input 8	15	X9	Input 9
7	XA	Input 10	16	XB	Input 11
8	XC	Input 12	17	XD	Input 13
9	XE	Input 14	18	XF	Input 15

CIRCUIT DIAGRAM

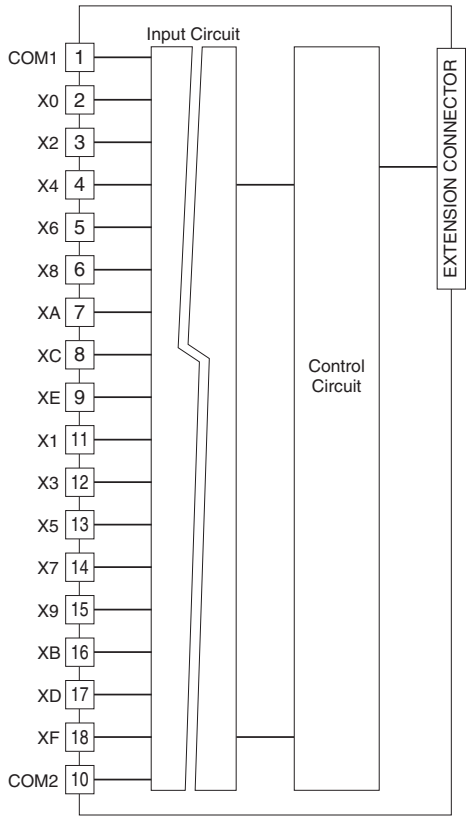

■ **Input Circuit**

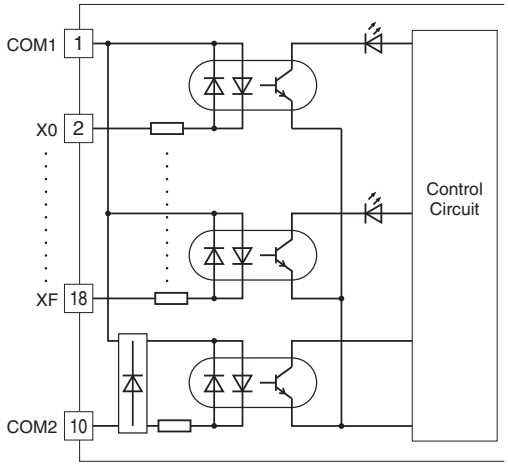

■ **Input Connection Examples**

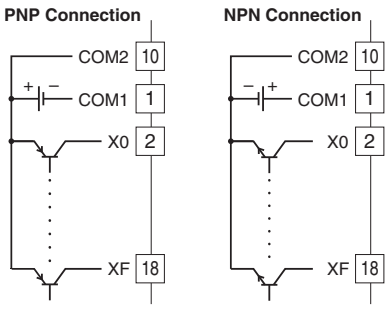

MG CO., LTD.
www.mgco.jp

NPN TRANSISTOR OUTPUT EXTENSION MODULE, 8 points

MODEL: R7D-EC8A

SPECIFICATIONS

Common: Negative common (NPN) per 8 points
Number of I/O: Output, 8 points
Maximum outputs applicable at once: No limit (at 24 V DC)
Output status indicator: LED turns ON with contact ON
Isolation: Output to internal circuits
Rated load voltage: 24 V DC ±10 %
Rated output current: 0.25 A per point, 2.0 A per common
Residual voltage: ≤ 1.2 V
Leakage current: ≤ 0.1 mA
ON delay: ≤ 0.5 msec.
OFF delay: ≤ 1.5 msec.
(When driving an inductive load, connect a diode in parallel with the load.)

TERMINAL ASSIGNMENTS

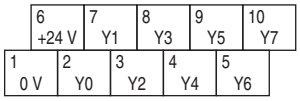

NO.	ID	FUNCTION	NO.	ID	FUNCTION
1	0 V	0 V (common)	6	+24 V	24 V DC
2	Y0	Output 0	7	Y1	Output 1
3	Y2	Output 2	8	Y3	Output 3
4	Y4	Output 4	9	Y5	Output 5
5	Y6	Output 6	10	Y7	Output 7

CIRCUIT DIAGRAM

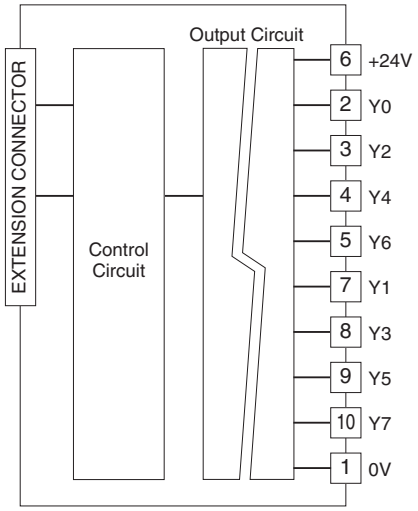

■ **Output Circuit**

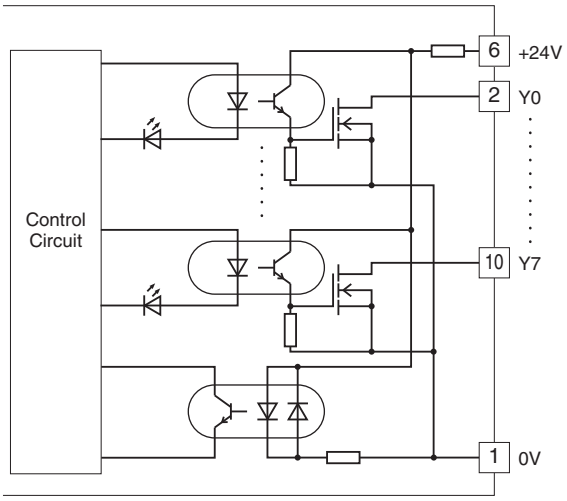

■ **Output Connection Example**

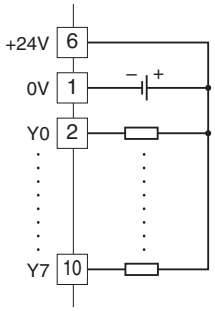

MG CO., LTD.
www.mgco.jp

NPN TRANSISTOR OUTPUT EXTENSION MODULE, 16 points

MODEL: R7D-EC16A

SPECIFICATIONS

Common: Negative common (NPN) per 16 points
Number of I/O: Output, 16 points
Maximum outputs applicable at once: No limit (at 24 V DC)
Output status indicator: LED turns ON with contact ON
Isolation: Output to internal circuits
Rated load voltage: 24 V DC ±10 %
Rated output current: 0.25 A per point, 2.0 A per common
Residual voltage: ≤ 1.2 V
Leakage current: ≤ 0.1 mA
ON delay: ≤ 0.5 msec.
OFF delay: ≤ 1.5 msec.
(When driving an inductive load, connect a diode in parallel with the load.)

TERMINAL ASSIGNMENTS

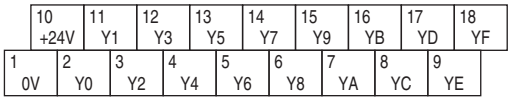

NO.	ID	FUNCTION	NO.	ID	FUNCTION
1	0 V	0 V (common)	10	+24 V	24 V DC
2	Y0	Output 0	11	Y1	Output 1
3	Y2	Output 2	12	Y3	Output 3
4	Y4	Output 4	13	Y5	Output 5
5	Y6	Output 6	14	Y7	Output 7
6	Y8	Output 8	15	Y9	Output 9
7	YA	Output 10	16	YB	Output 11
8	YC	Output 12	17	YD	Output 13
9	YE	Output 14	18	YF	Output 15

CIRCUIT DIAGRAM

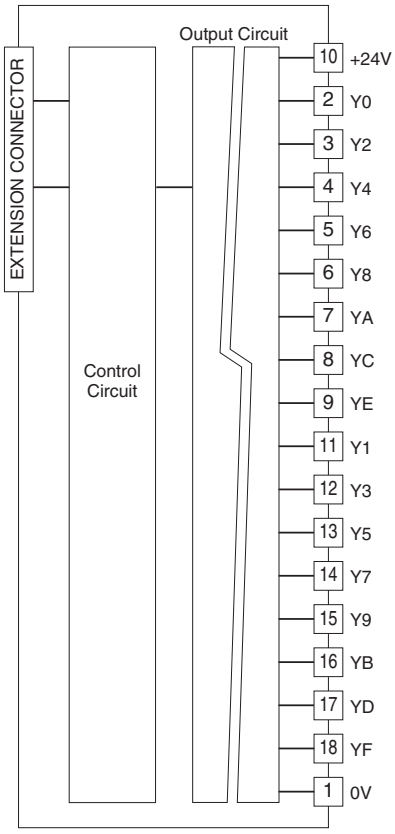

■ **Output Circuit**

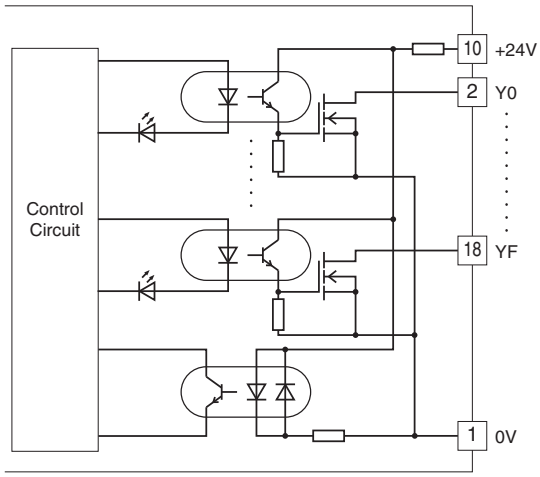

■ **Output Connection Example**

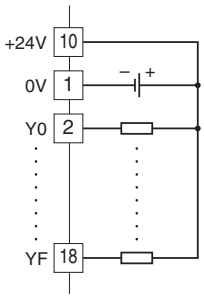

MG CO., LTD.
www.mgco.jp

PNP TRANSISTOR OUTPUT EXTENSION MODULE, 8 points

MODEL: R7D-EC8B

SPECIFICATIONS

Common: Positive common (PNP) per 8 points
Number of I/O: Output, 8 points
Maximum outputs applicable at once: No limit (at 24 V DC)
Output status indicator: LED turns ON with contact ON
Isolation: Output to internal circuits
Rated load voltage: 24 V DC ±10 %
Rated output current: 0.25 A per point, 2.0 A per common
Residual voltage: ≤ 1.2 V
Leakage current: ≤ 0.1 mA
ON delay: ≤ 0.5 msec.
OFF delay: ≤ 1.5 msec.
(When driving an inductive load, connect a diode in parallel with the load.)

TERMINAL ASSIGNMENTS

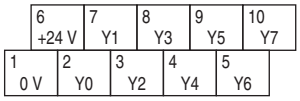

NO.	ID	FUNCTION	NO.	ID	FUNCTION
1	0 V	0 V	6	+24 V	24 V DC (common)
2	Y0	Output 0	7	Y1	Output 1
3	Y2	Output 2	8	Y3	Output 3
4	Y4	Output 4	9	Y5	Output 5
5	Y6	Output 6	10	Y7	Output 7

CIRCUIT DIAGRAM

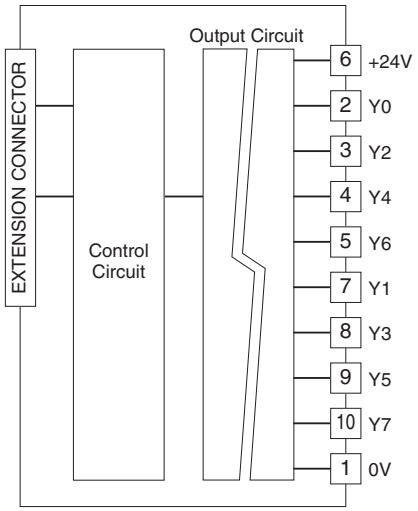

■ **Output Circuit**

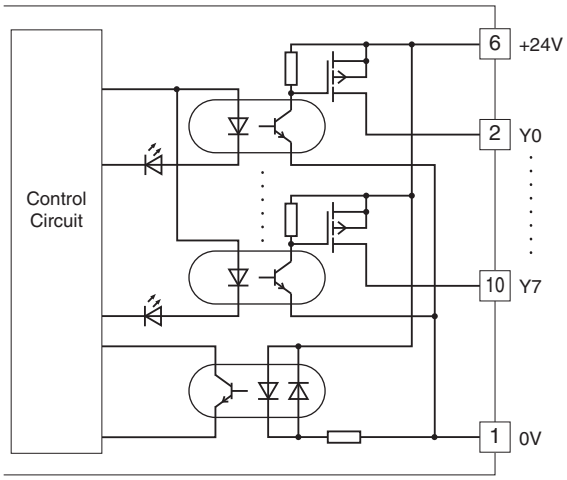

■ **Output Connection Example**

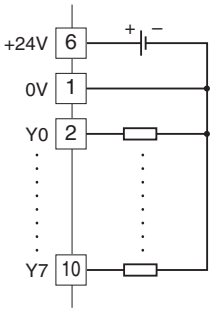

MG CO., LTD.
www.mgco.jp

PNP TRANSISTOR OUTPUT EXTENSION MODULE, 16 points

MODEL: R7D-EC16B

SPECIFICATIONS

Common: Positive common (PNP) per 16 points
Number of I/O: Output, 16 points
Maximum outputs applicable at once: No limit (at 24 V DC)
Output status indicator: LED turns ON with contact ON
Isolation: Output to internal circuits
Rated load voltage: 24 V DC ±10 %
Rated output current: 0.25 A per point, 2.0 A per common
Residual voltage: ≤ 1.2 V
Leakage current: ≤ 0.1 mA
ON delay: ≤ 0.5 msec.
OFF delay: ≤ 1.5 msec.
(When driving an inductive load, connect a diode in parallel with the load.)

TERMINAL ASSIGNMENTS

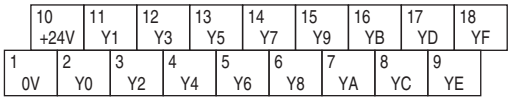

NO.	ID	FUNCTION	NO.	ID	FUNCTION
1	0 V	0 V	10	+24 V	24 V DC (common)
2	Y0	Output 0	11	Y1	Output 1
3	Y2	Output 2	12	Y3	Output 3
4	Y4	Output 4	13	Y5	Output 5
5	Y6	Output 6	14	Y7	Output 7
6	Y8	Output 8	15	Y9	Output 9
7	YA	Output 10	16	YB	Output 11
8	YC	Output 12	17	YD	Output 13
9	YE	Output 14	18	YF	Output 15

CIRCUIT DIAGRAM

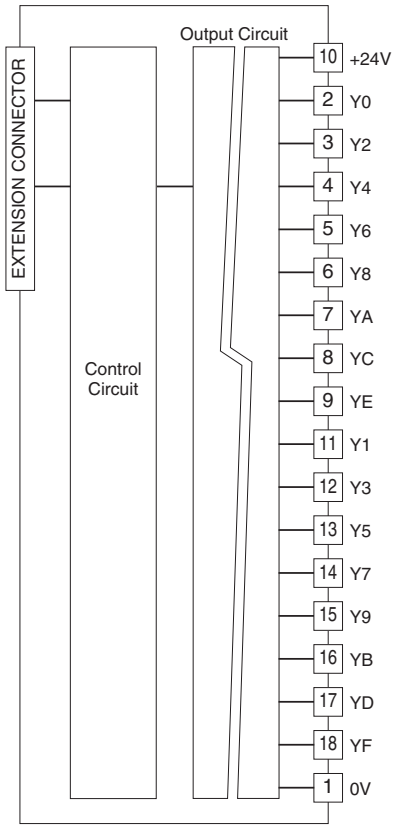

■ **Output Circuit**

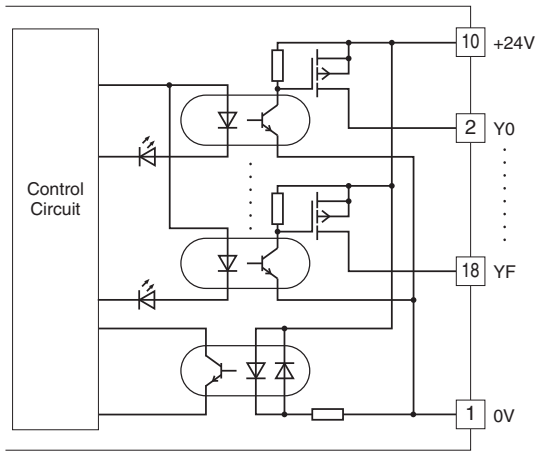

■ **Output Connection Example**

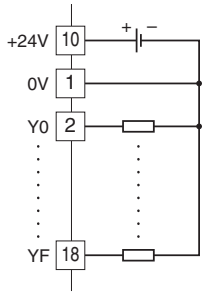

MG CO., LTD.
www.mgco.jp

RELAY CONTACT OUTPUT EXTENSION MODULE

MODEL: R7D-EC8C

SPECIFICATIONS

Common: 1 common per 4 points (4 terminals)
Common current: Max. 8 A (4 terminals)
Number of I/O: Relay contact output, 8 points
Maximum outputs applicable at once: No limit (at 24 V DC)
Output status indicator: LED turns ON with contact ON
Isolation: Output to internal circuits
Relay driving power: 24 V DC ±10 %, ≥ 60 mA
Rated load: 250 V AC* @2 A (cos ø = 1)
30 V DC @2 A (resistive load)
Electrical life 10^5 cycles (rate 30/min.)
*When it is used as a product relevant to EU directive, it should be used under the Installation Category I, 125 V AC or less.
Maximum switching voltage: 250 V AC or 30 V DC
Maximum switching power: 500 VA or 60 W
Minimum load: 24 V DC @5 mA
Mechanical life: 2×10^7 cycles (rate 300/min.)
When driving an inductive load, external contact protection and noise quenching are recommended.
ON delay: ≤ 10 msec.
OFF delay: ≤ 10 msec.

TERMINAL ASSIGNMENTS

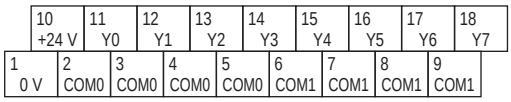

NO.	ID	FUNCTION	NO.	ID	FUNCTION
1	0V	0 V	10	+24V	24 V DC
2	COM0	Common 0	11	Y0	Output 0
3	COM0	Common 0	12	Y1	Output 1
4	COM0	Common 0	13	Y2	Output 2
5	COM0	Common 0	14	Y3	Output 3
6	COM1	Common 1	15	Y4	Output 4
7	COM1	Common 1	16	Y5	Output 5
8	COM1	Common 1	17	Y6	Output 6
9	COM1	Common 1	18	Y7	Output 7

CIRCUIT DIAGRAM

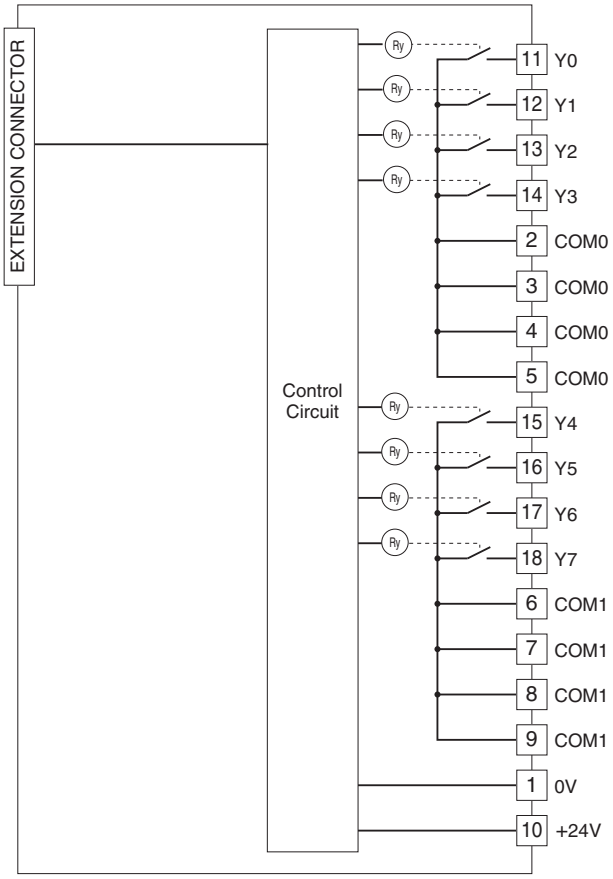

■ **Output Connection Example**

4 points / common

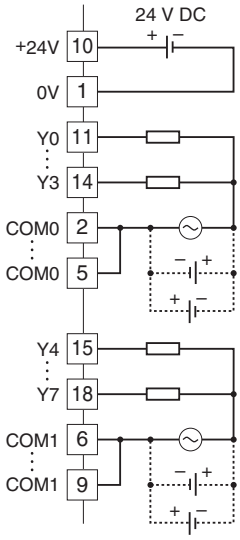

8 points / common

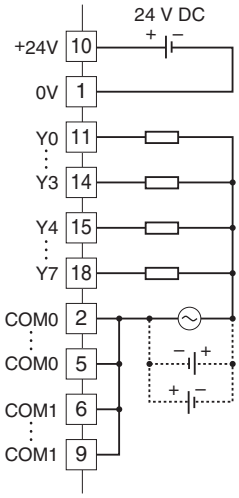

MG CO., LTD.
www.mgco.jp

⚠ Specifications are subject to change without notice.

MG CO., LTD.
www.mgco.jp