Remote I/O R7 Series

ETHERNET I/O MODULE

(Modbus/TCP)

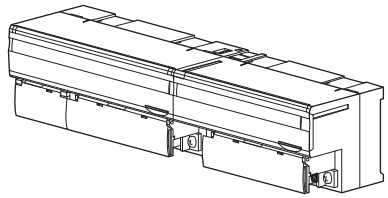

ORDERING INFORMATION

• Basic module: R7E-[1]-R[2]
Specify a code from below for each of [1] and [2].
(e.g. R7E-DC16A-R/Q)
• Specify the specification for option code /Q
(e.g. /C01/SET)

• Extension module: R7E-[1][2]
Specify a code from below for each of [1] and [2].
(e.g. R7E-EC16B/Q)
• Specify the specification for option code /Q
(e.g. /C01)

BASIC MODULE: R7E–[1]–R[2]

[1] I/O TYPE

DA16: Discrete input, 16 points
DC16A: NPN transistor output, 16 points
DC16B: PNP transistor output, 16 points
SV4: DC voltage/current input (10 V/20 mA), 4 points
TS4: Thermocouple input, 4 points
RS4: RTD input, 4 points
MS4: Potentiometer input, 4 points
CT4E: AC current input, 4 points,
clamp-on current sensor CLSE use
PA8: Totalized pulse input, 8 points,
(CE not available)
YV2: DC voltage output, 2 points
YS2: DC current output, 2 points

POWER INPUT

DC Power
R: 24 V DC
(Operational voltage range 24 V ±10 %, ripple 10 %p-p max.)

[2] OPTIONS

blank: none
/Q: With options (specify the specification)

SPECIFICATIONS OF OPTION: Q (multiple selections)

COATING (For the detail, refer to our web site.)
/C01: Silicone coating
/C02: Polyurethane coating
/C03: Rubber coating
EX-FACTORY SETTING
/SET: Preset according to the Ordering Information Sheet (No. ESU-7807-x)

EXTENSION MODULE: R7E–[1][2]

[1] I/O TYPE

EA8: Discrete input, 8 points
EA16: Discrete input, 16 points
EC8A: NPN transistor output, 8 points
EC16A: NPN transistor output, 16 points
EC8B: PNP transistor output, 8 points
EC16B: PNP transistor output, 16 points

[2] OPTIONS

blank: none
/Q: Option other than the above (specify the specification)

SPECIFICATIONS OF OPTION: Q

COATING (For the detail, refer to our web site.)
/C01: Silicone coating
/C02: Polyurethane coating
/C03: Rubber coating

FUNCTIONS & FEATURES

The R7E interfaces analog and discrete I/O signals with a PLC or PC via Ethernet Modbus/TCP nerwork.
A ‘basic’ module can be attached with an ‘extension’ module. By combining two modules, single station can handle mixed analog and discrete signals, 32-point discrete inputs, 32-point discrete outputs, 16-point discrete I/Os and other
combinations of signals.
Input sensor type (thermocouple, RTD) and range can be selected with the front DIP switches for all channels. In order to set different selections for individual channels, the PC Configurator Software (model: R7CON) is used.

MG CO., LTD.
www.mgco.jp

RELATED PRODUCTS

• PC Configurator cable (model: MCN-CON or COP-US)
• PC configurator software (model: R7CON)
Downloadable at our web site.
• Clamp-on current sensor (model: CLSE)
For R7E-CT4E, the clamp-on current sensors must be ordered separately. Required number depends upon the channel number.

Note: PC Configurator Software is required to set IP address.

GENERAL SPECIFICATIONS

■ Common Specifications
Power input: 24 V DC ±10 %; ripple 10 %p-p max.
Insulation resistance: ≥ 100 MΩ with 500 V DC
Dielectric strength: 1500 V AC @1 minute (between isolated circuits)
Operating temperature: -10 to +55°C (14 to 131°F)
Operating humidity: 30 to 90 %RH (non-condensing)
Atmosphere: No corrosive gas or heavy dust
Storage temperature: -20 to +65°C (-4 to +149°F)
Mounting: DIN rail (35 mm wide)
Connection
Ethernet: RJ-45 connector
Power & I/O: M3 separable screw terminals (torque 0.5 N·m)
Screw terminal material: Nickel-plated steel
Solderless terminal: Refer to the drawing at the end of the section.
Recommended manufacturer: Japan Solderless Terminal MFG.Co.Ltd, Nichifu Co.,ltd
Applicable wire size: 0.25 to 1.65 mm^2 (AWG22 to 16)
Housing material: Flame-resistant resin (gray)
Status indicator LEDs: PWR, RUN
Configurator connection: 2.5 dia. miniature jack (not available with extension module)

■ Current Consumption & Weight
R7E-DA16: Approx. 74 mA, 200 g (7.0 oz)
R7E-DC16A: Approx. 86 mA, 200 g (7.0 oz)
R7E-DC16B: Approx. 86 mA, 200 g (7.0 oz)
R7E-SV4: Approx. 97 mA, 200 g (7.0 oz)
R7E-TS4: Approx. 97 mA, 200 g (7.0 oz)
R7E-RS4: Approx. 97 mA, 200 g (7.0 oz)
R7E-MS4: Approx. 97 mA, 200 g (7.0 oz)
R7E-CT4E: Approx. 90 mA, 200 g (7.0 oz)
R7E-PA8: Approx. 80 mA, 200 g (7.0 oz)
R7E-YV2: Approx. 115 mA, 180 g (6.3 oz)
R7E-YS2: Approx. 161 mA, 180 g (6.3 oz)
R7E-EA8: Approx. 10 mA, 90 g (3.2 oz)
R7E-EA16: Approx. 20 mA, 150 g (5.3 oz)
R7E-EC8A: Approx. 10 mA, 90 g (3.2 oz)
R7E-EC16A: Approx. 20 mA, 150 g (5.3 oz)
R7E-EC8B: Approx. 10 mA, 90 g (3.2 oz)
R7E-EC16B: Approx. 20 mA, 150 g (5.3 oz)

■ **Recommended solderless terminal**

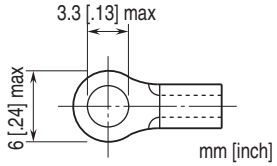

ETHERNET COMMUNICATION

Physical layer standard: IEEE 802.3u
Data link layer: 10BASE-T / 100BASE-TX
Baud rate: 10 / 100 Mbps, Auto Negotiation
Protocol: Modbus/TCP
Data: RTU (binary)
Max. number of socket connections: Two (2)
Transmission media: 10BASE-T (STP cable, category 5)
100BASE-TX (STP cable, category 5e)
Max. segment length: 100 meters
IP address: Can be set and changed with PC Configurator Software (model: R7CON) (default: 192.168.0.1)
Subnet Mask: Can be set and changed with PC Configurator Software (model: R7CON) (default: 255.255.255.0)
Default Gateway: Can be set and changed with PC Configurator Software (model: R7CON) (Ver.2.41 or later: R7E-DA16, DC16A, DC16B, PA8, SV4, CT4E, YV2, YS2) (default: 192.168.0.100)
Port No.: 502
DHCP available (Ver.3.00 or later: R7E-DA16, DC16A, DC16B, PA8, SV4, CT4E, YV2, YS2)
Ethernet indicator LED: LINK, LINK100, COL

STANDARDS & APPROVALS

EU conformity:
EMC Directive
EMI EN 61000-6-4
EMS EN 61000-6-2
RoHS Directive

MG CO., LTD.
www.mgco.jp

EXTERNAL VIEW

■ BASIC MODULE

• **SIDE VIEW**

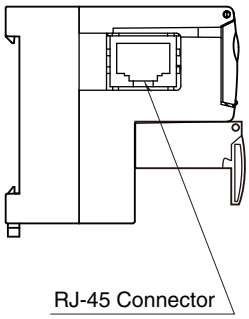

• **FRONT VIEW**

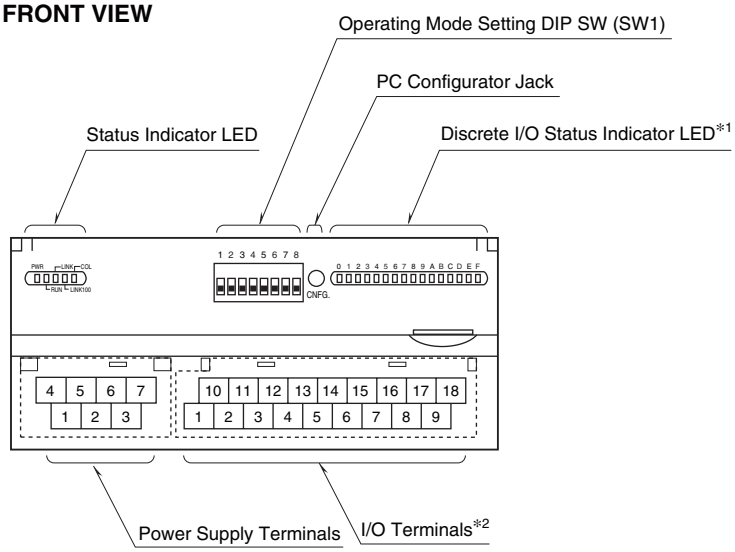

*1. Not available with analog I/O modules.
*2. 10 screw terminals for analog output modules.

■ EXTENSION MODULE

• **DISCRETE, 8 POINTS**

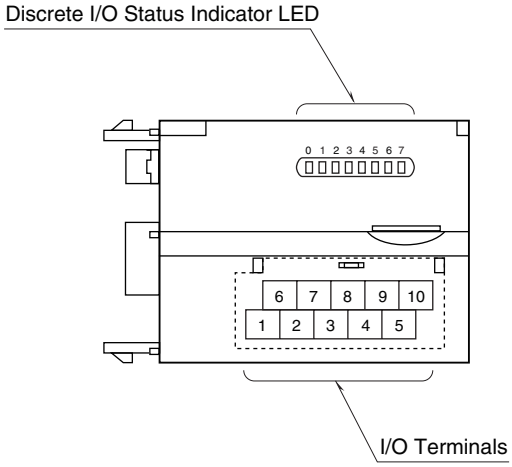

MG CO., LTD.
www.mgco.jp

- **DISCRETE, 16 POINTS**

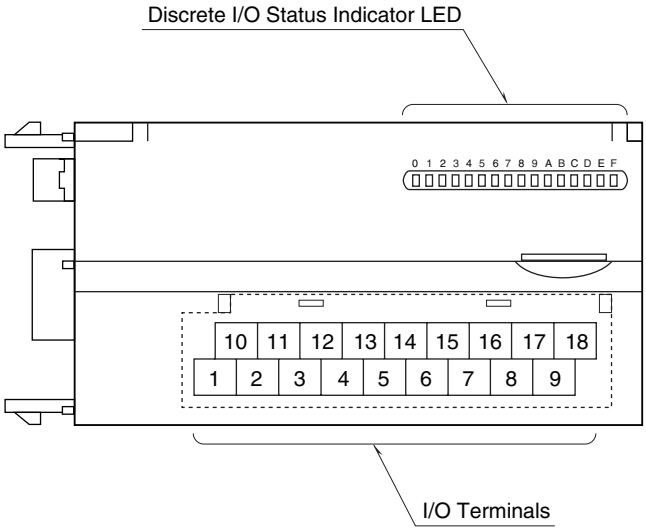

■ DISCRETE I/O & TOTALIZED PULSE INPUT STATUS INDICATOR LED

Discrete I/O modules, including those for extensions, have LED indicators showing I/O signal status.
Totalized pulse modules have LED indicators showing input signal status.
ON : LED ON
OFF : LED OF

CONNECTION DIAGRAMS

■ **POWER SUPPLY TERMINAL ASSIGNMENT**

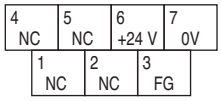

NO.	ID	FUNCTION, NOTES
1	NC	----
2	NC	----
3	FG	FG
4	NC	----
5	NC	----
6	+24 V	Power input (24 V DC)
7	0 V	Power input (0 V)

MODBUS FUNCTION CODES & SUPPORTED CODES

■ Data & Control Functions

CODE	NAME		
01	Read Coil Status	X	Digital output from the slave (read/write)
02	Read Input Status	X	Status of digital inputs to the slave (read only)
03	Read Holding Registers	X	General purpose register within the slave (read/write)
04	Read Input Registers	X	Collected data from the field by the slave (read only)
05	Force Single Coil	X	Digital output from the slave (read/write)
06	Preset Single Register	X	General purpose register within the slave (read/write)
07	Read Exception Status		
08	Diagnostics	X	
09	Program 484		
10	Poll 484		
11	Fetch Comm. Event Counter	X	Fetch a status word and an event counter
12	Fetch Comm. Event Log	X	A status word, an event counter, a message count and a field of event bytes
13	Program Controller		
14	Poll Controller		
15	Force Multiple Coils	X	Digital output from the slave (read/write)
16	Preset Multiple Registers	X	General purpose register within the slave (read/write)
17	Report Slave ID	X	Slave type / 'RUN' status
18	Program 884/M84		
19	Reset Comm. Link		
20	Read General Reference		
21	Write General Reference		
22	Mask Write 4X Register		
23	Read/Write 4X Register		
24	Read FIFO Queue		

■ Exception Code

CODE	NAME		
01	Illegal Function	X	Function code is not allowable for the slave
02	Illegal Data Address	X	Address is not available within the slave
03	Illegal Data Value	X	Data is not valid for the function
04	Slave Device Failure		
05	Acknowledge		
06	Slave Device Busy		
07	Negative Acknowledge		
08	Memory Parity Error		

■ Diagnostic Subfunctions

CODE	NAME		
00	Return Query Data	X	Loop back test
01	Restart Comm. Option		
02	Return Diagnostic Register		
03	Change Input Delimiter Character		
04	Force Slave to Listen Only Mode		

MG CO., LTD.
www.mgco.jp

MODBUS I/O ASSIGNMENT

	ADDRESS	DATA TYPE	DATA
Coil (0X)	1 – 16		Digital Output (discrete output of the basic module)
	17 – 32		Digital Output (discrete output of the extension module)
Inputs (1X)	1 – 16		Digital Input (discrete input of the basic module)
	17 – 32		Digital Input (discrete input of the extension module)
	33 – 48		Reserved (unused)
	49 – 64		Module Status
	65 – 80		Reserved (unused)
Input Registers (3X)	1 – 4	I	Analog Input
	5 – 16	----	Reserved (unused)
	17 – 24	F	Analog Input
	25 – 48	----	Reserved (unused)
Holding Registers (4X)	1 – 2	I	Analog Output
	3 – 16	----	Reserved (unused)
	17 – 20	F	Analog Output
	21 – 48	----	Reserved (unused)

I : Integer, -1500 – +11500 (-15 – +115%)
F : Floating
Note: DO NOT access addresses other than mentioned above. Such access may cause problems such as inadequate operation.

■ STATUS

Analog input modules (models: R7E-SV4, R7E-TS4, R7E-RS4, R7E-MS4, R7E-CT4E) can show input status of each channel. Analog output modules (models: R7E-YS2, R7E-YV2), discrete I/O modules (models: R7E-DA16, R7E-DC16A, R7E-DC16B) and totalized pulse input (model: R7E-PA8) show ‘0’ at the same address.

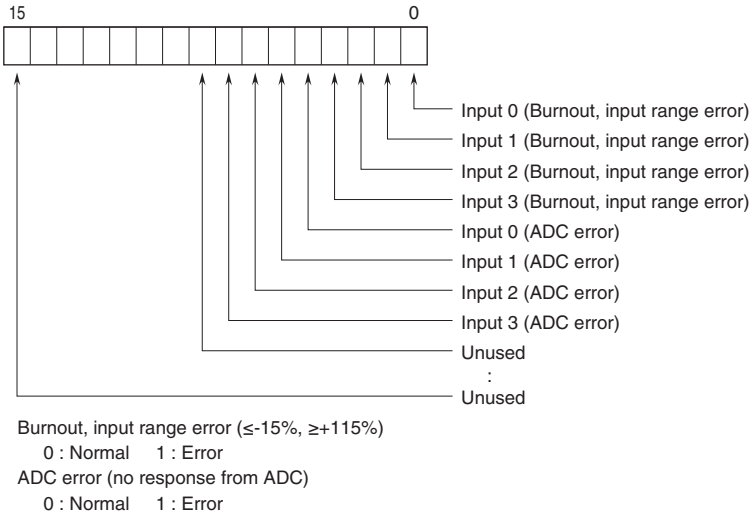

DATA CONVERSION

■ 0 – 100% DATA CONVERSION

Analog input data is converted into digital representations of 0 – 100% proportional to each scaled range. The converted % values are multiplied by 100 and expressed in 16 bits.
Overrange input is possible from -15 to +115% of the nominal range. When the signal exceeds the limit, the data is fixed at -15% or +115% respectively. Negative value is represented in 2's complements.

• Input Range 0 – 5 V DC

Input Value	Input %	Converted Data, Decimal	Converted Data, Hex
≤ -0.75 V	-15%	-1500	FA24
0 V	0%	0	0
5 V	100%	10000	2710
≥ 5.75 V	115%	11500	2CEC

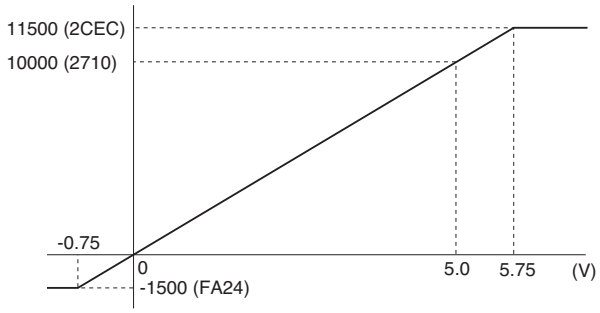

Analog output is converted in the reverse order of the input data. The output range 0 – 5 V DC is expressed as 10000 at 5.0 V (100%) and 0 at 0 V (0%).

■ ENGINEERING UNIT CONVERSION

Engineering unit value °C or K is multiplied by 10 and expressed in 16 bits. °F data is represented in engineering unit value, without multiplication. Engineering unit value A is multiplied by 100 or 1000, expressed in 16 bits. Negative value is represented in 2's complements.

• Input TYPE K Thermocouple

Input Value	Converted Data, Decimal	Converted Data, Hex
≤ -272°C	-2720	F560
-150°C	-1500	FA24
1370°C	13700	3584
≥ 1472°C	14720	3980

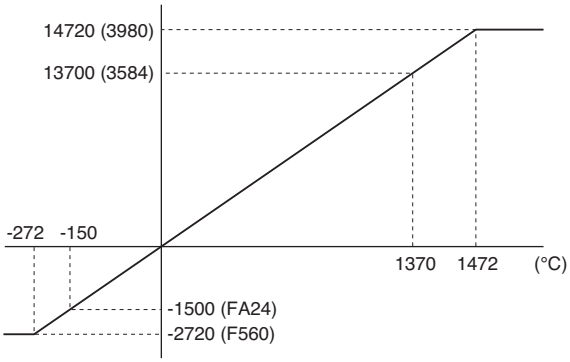

■ COUNT VALUE

The count value is 32-bit data. It is divided in 2 words of 16 bits represented with 2 addresses.The lower address is allocated in the upper word (MSB) and the upper address in the lower word (LSB). The count value is 0 - 4 294 967 295. The maximum count value available is 1 000 - 4 294 967 295. In case of overflow, the vaule is reset to 0 or 1 (configurable) from which the count will restart. The preset of the count value is also available. Use the R7CON or host PC/PLC for the configuration.

MG CO., LTD.
www.mgco.jp

EXTENSION MODULE

A ‘basic’ module can be attached with one ‘extension’ module. The extension module is powered from the basic module. By combining two modules, single station can handle mixed analog and discrete signals, 32-point discrete inputs, 32-point discrete outputs, 16-point discrete I/Os and other combinations of signals.

■ OUTPUT AT THE LOSS OF COMMUNICATION

The extension module is set to ‘Hold Output’ by factory default setting. The PC Configurator software is used to change the setting to ‘Reset Output.’

■ CONNECTING THE EXTENSION MODULE

1) Remove the extension connector cover located at the side of the basic module.
2) Connect the extension module.

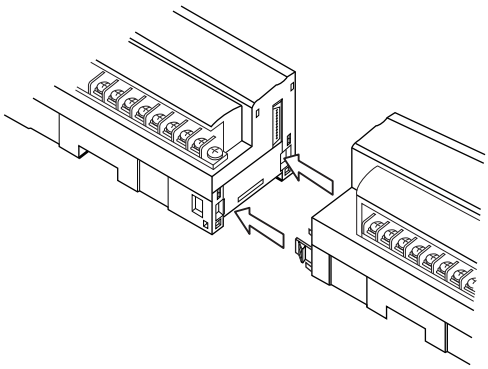

3) Mount the combined module on a DIN rail.

EXTERNAL DIMENSIONS & TERMINAL ASSIGNMENTS unit: mm [inch]

■ BASIC MODULE

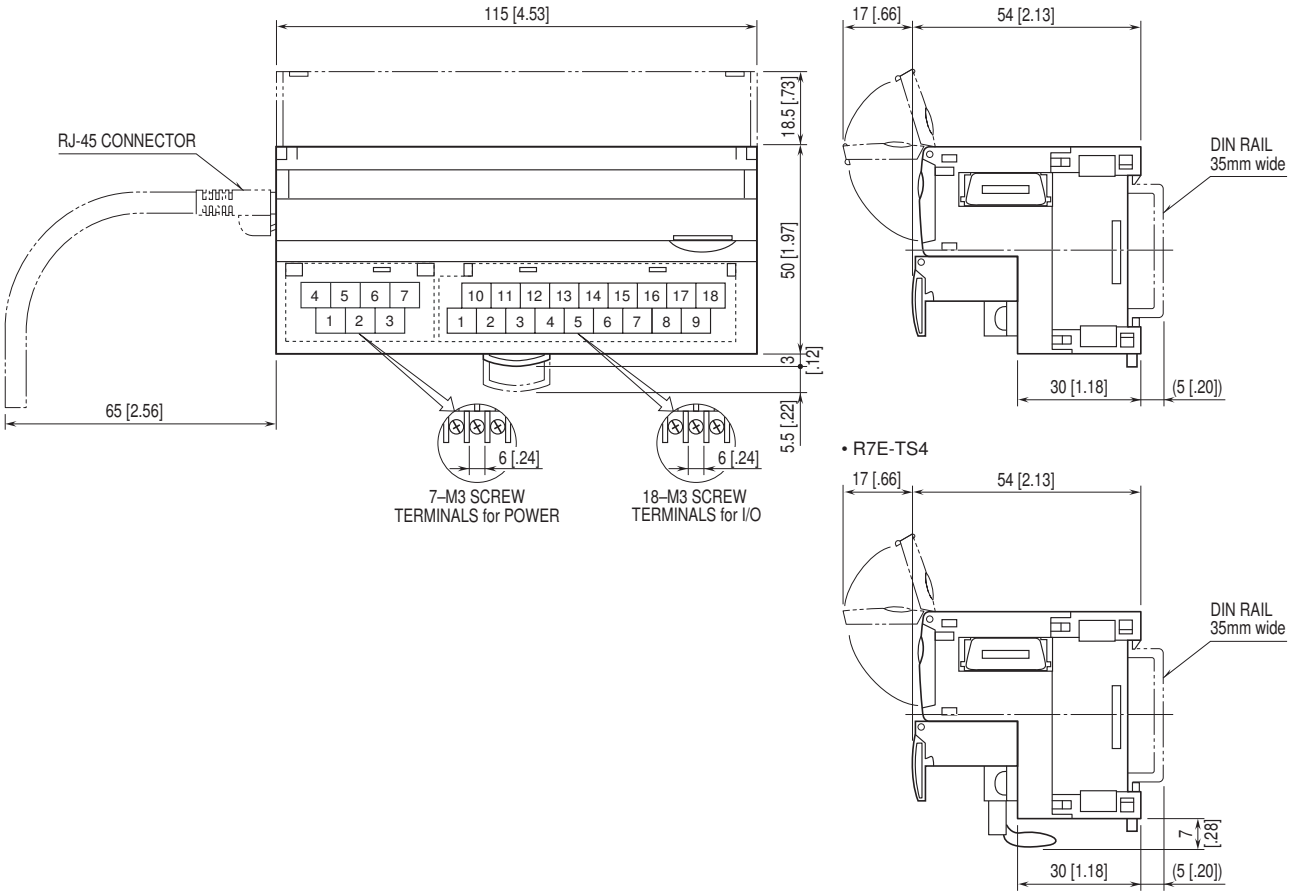

MG CO., LTD.
www.mgco.jp

■ BASIC MODULE, ANALOG OUTPUT

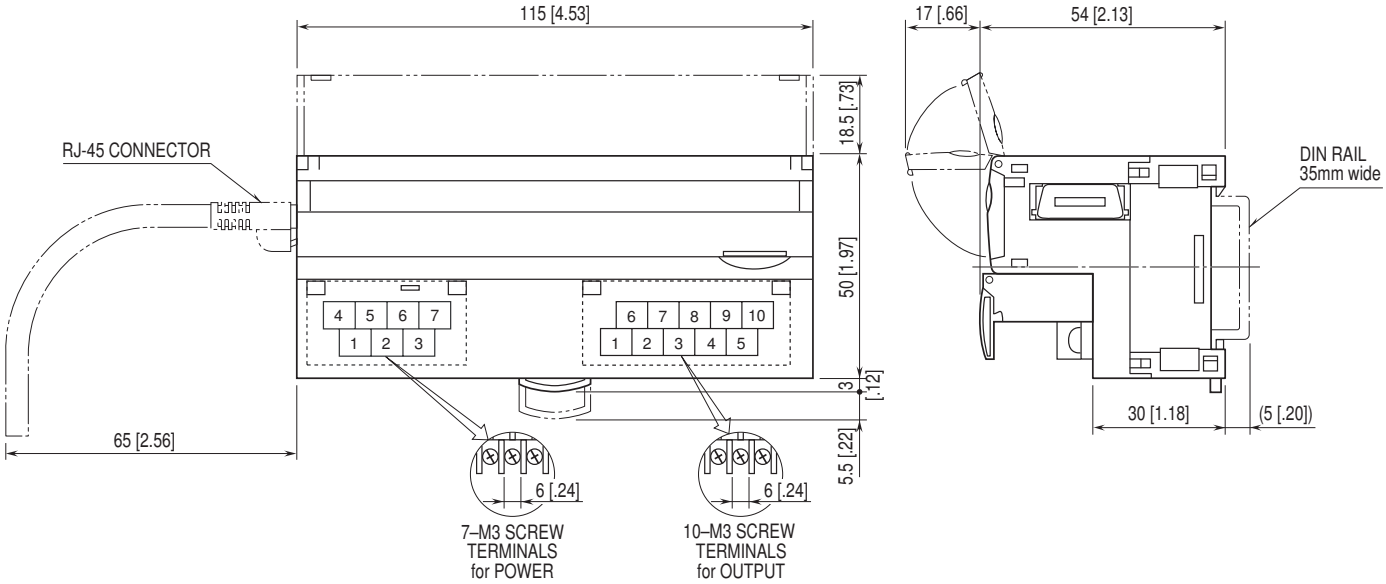

■ EXTENSION MODULE, 8 POINTS

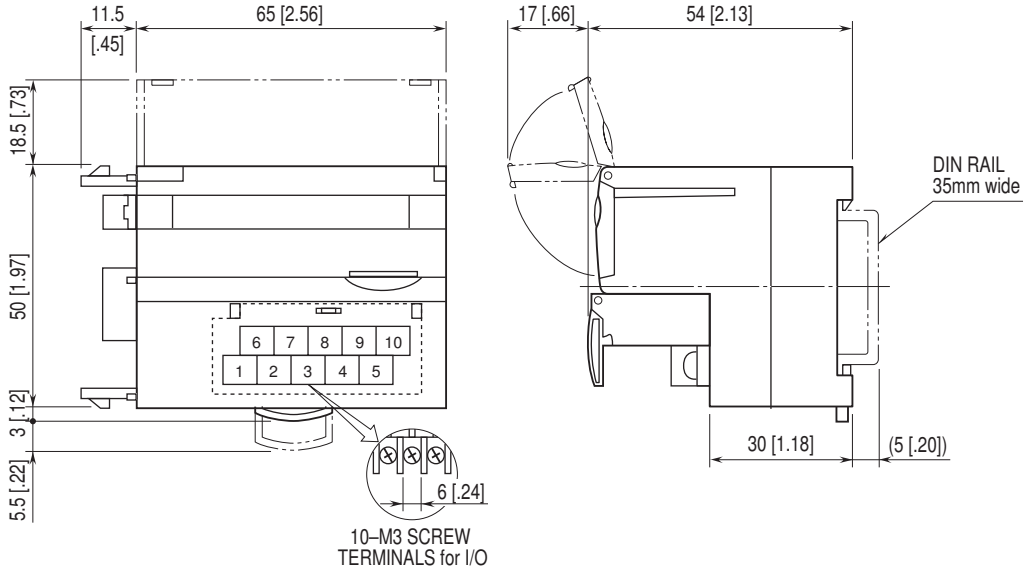

■ EXTENSION MODULE, 16 POINTS

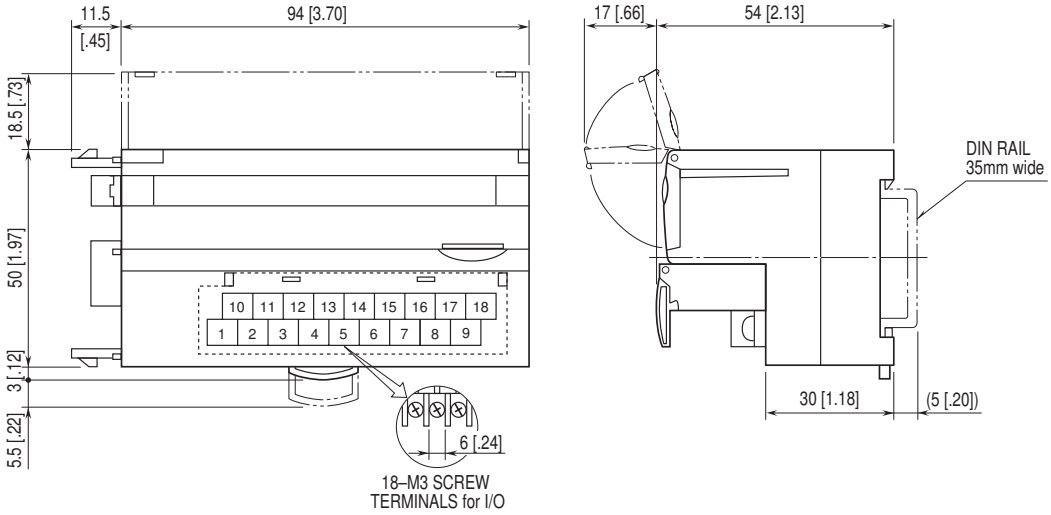

MG CO., LTD.
www.mgco.jp

DISCRETE INPUT MODULE, 16 points

MODEL: R7E-DA16

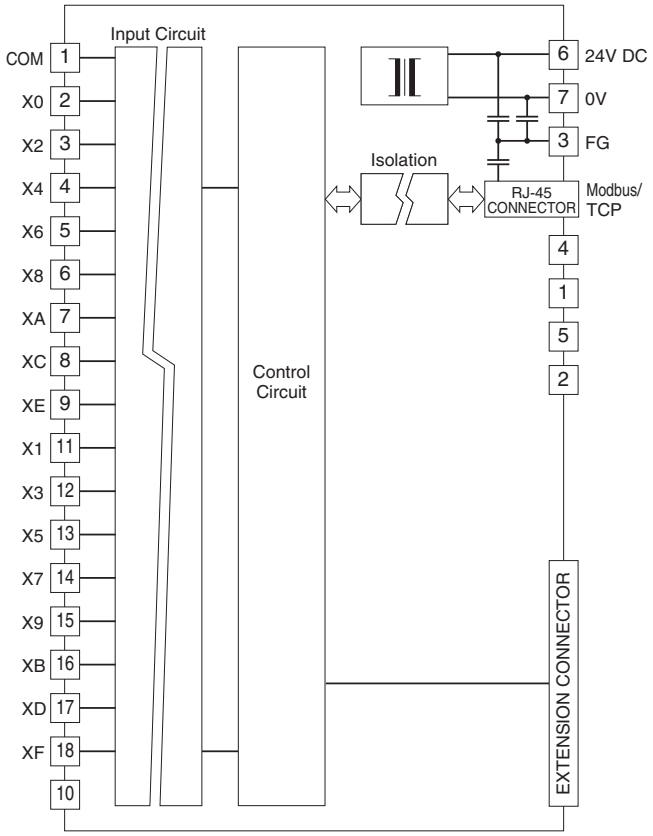

SPECIFICATIONS

Common: Positive or negative common (NPN/PNP) per 16 points
Number of I/O: Input, 16 points
Maximum inputs applicable at once: No limit (at 24 V DC)
Input status indicator: LED turns ON with contact ON
Isolation: Input to Ethernet to FG to power input
Rated input voltage: 24 V DC ±10 %; ripple 5 %p-p max.
ON voltage / current: ≥ 15 V DC (input – COM) / ≥ 3.5 mA
OFF voltage / current: ≤ 5 V DC (input – COM) / ≤ 1 mA
Input current: ≤ 5.5 mA per point at 24 V DC
Input resistance: Approx. 4.4 kΩ
ON delay: ≤ 2.0 msec.
OFF delay: ≤ 2.0 msec.

OPERATING MODE SETTING

(*) Factory setting
Note: Be sure to set unused SW1-3 through 1-8 to OFF.

• Extension (SW1-1, 1-2)

SW1-1	SW1-2	Extension
OFF	OFF	No extension (*)
ON	OFF	Discrete input, 8 or 16 points
OFF	ON	Discrete output, 8 or 16 points

TERMINAL ASSIGNMENTS

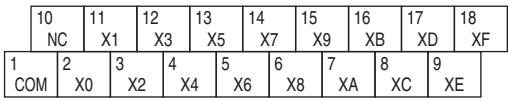

NO.	ID	FUNCTION	NO.	ID	FUNCTION
1	COM	Common	10	NC	No Connection
2	X0	Input 0	11	X1	Input 1
3	X2	Input 2	12	X3	Input 3
4	X4	Input 4	13	X5	Input 5
5	X6	Input 6	14	X7	Input 7
6	X8	Input 8	15	X9	Input 9
7	XA	Input 10	16	XB	Input 11
8	XC	Input 12	17	XD	Input 13
9	XE	Input 14	18	XF	Input 15

CIRCUIT DIAGRAM

Note: In order to improve EMC performance, bond the FG terminal to ground.
Caution: FG terminal is NOT a protective conductor terminal.

■ **Input Circuit**

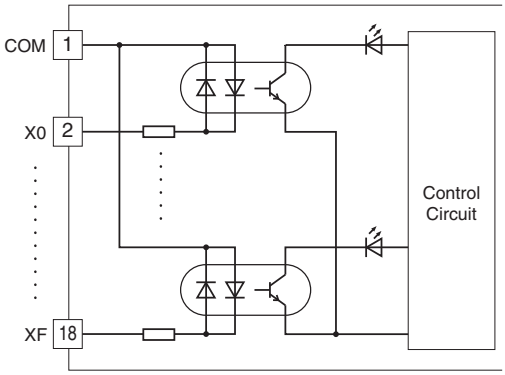

■ **Input Connection Examples**

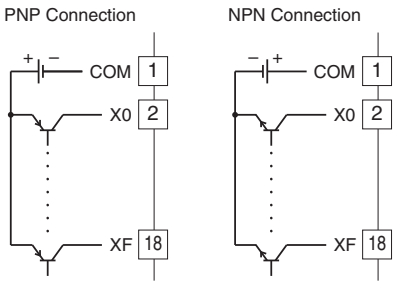

MG CO., LTD.
www.mgco.jp

NPN TRANSISTOR OUTPUT MODULE, 16 points

MODEL: R7E-DC16A

SPECIFICATIONS

Common: Negative common (NPN) per 16 points
Number of I/O: Output, 16 points
Maximum outputs applicable at once: No limit (at 24 V DC)
Output status indicator: LED turns ON with contact ON
Isolation: Output to Ethernet to FG to power input
Rated load voltage: 24 V DC ±10 %
Rated output current: 0.25 A per point, 2.0 A per common
Residual voltage: ≤ 1.2 V
Leakage current: ≤ 0.1 mA
ON delay: ≤ 0.5 msec.
OFF delay: ≤ 1.5 msec.
(When driving an inductive load, connect a diode in parallel with the load.)

OPERATING MODE SETTING

(*) Factory setting
Note: Be sure to set unused SW1-3 and 1-5 through 1-8 to OFF.

• Output at the Loss of Communication (SW1-4)

SW1-4	Output at the loss of communication
OFF	Reset the output (turned off)
ON	Hold the output (*) (maintains the last data received normally)

• Extension (SW1-1, 1-2)

SW1-1	SW1-2	Extension
OFF	OFF	No extension (*)
ON	OFF	Discrete input, 8 or 16 points
OFF	ON	Discrete output, 8 or 16 points

TERMINAL ASSIGNMENTS

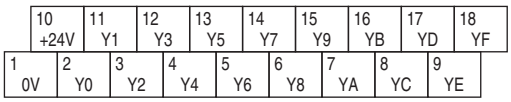

NO.	ID	FUNCTION	NO.	ID	FUNCTION
1	0 V	0 V (common)	10	+24 V	24 V DC
2	Y0	Output 0	11	Y1	Output 1
3	Y2	Output 2	12	Y3	Output 3
4	Y4	Output 4	13	Y5	Output 5
5	Y6	Output 6	14	Y7	Output 7
6	Y8	Output 8	15	Y9	Output 9
7	YA	Output 10	16	YB	Output 11
8	YC	Output 12	17	YD	Output 13
9	YE	Output 14	18	YF	Output 15

CIRCUIT DIAGRAM

Note: In order to improve EMC performance, bond the FG terminal to ground.
Caution: FG terminal is NOT a protective conductor terminal.

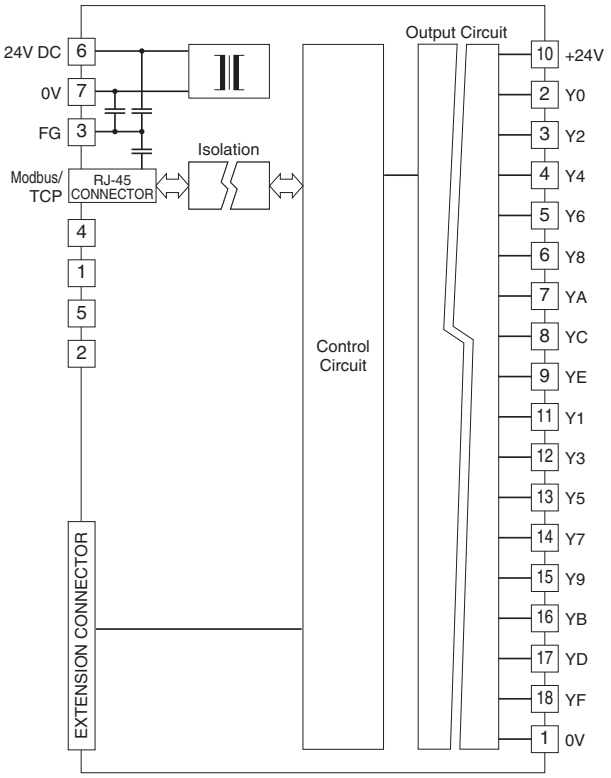

■ Output Circuit

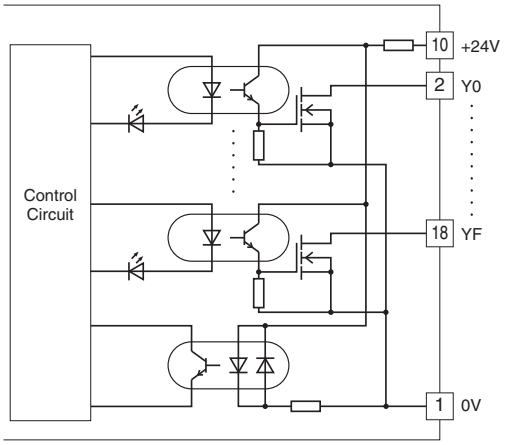

■ Output Connection Example

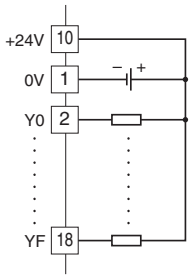

MG CO., LTD.
www.mgco.jp

PNP TRANSISTOR OUTPUT MODULE, 16 points

MODEL: R7E-DC16B

SPECIFICATIONS

Common: Positive common (PNP) per 16 points
Number of I/O: Output, 16 points
Maximum outputs applicable at once: No limit (at 24 V DC)
Output status indicator: LED turns ON with contact ON
Isolation: Output to Ethernet to FG to power input
Rated load voltage: 24 V DC ±10 %
Rated output current: 0.25 A per point, 2.0 A per common
Residual voltage: ≤ 1.2 V
Leakage current: ≤ 0.1 mA
ON delay: ≤ 0.5 msec.
OFF delay: ≤ 1.5 msec.
(When driving an inductive load, connect a diode in parallel with the load.)

OPERATING MODE SETTING

(*) Factory setting
Note: Be sure to set unused SW1-3 and 1-5 through 1-8 to OFF.

• Output at the Loss of Communication (SW1-4)

SW1-4	Output at the loss of communication
OFF	Reset the output (turned off)
ON	Hold the output (*) (maintains the last data received normally)

• Extension (SW1-1, 1-2)

SW1-1	SW1-2	Extension
OFF	OFF	No extension (*)
ON	OFF	Discrete input, 8 or 16 points
OFF	ON	Discrete output, 8 or 16 points

TERMINAL ASSIGNMENTS

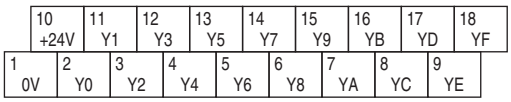

NO.	ID	FUNCTION	NO.	ID	FUNCTION
1	0 V	0 V	10	+24 V	24 V DC (common)
2	Y0	Output 0	11	Y1	Output 1
3	Y2	Output 2	12	Y3	Output 3
4	Y4	Output 4	13	Y5	Output 5
5	Y6	Output 6	14	Y7	Output 7
6	Y8	Output 8	15	Y9	Output 9
7	YA	Output 10	16	YB	Output 11
8	YC	Output 12	17	YD	Output 13
9	YE	Output 14	18	YF	Output 15

CIRCUIT DIAGRAM

Note: In order to improve EMC performance, bond the FG terminal to ground.
Caution: FG terminal is NOT a protective conductor terminal.

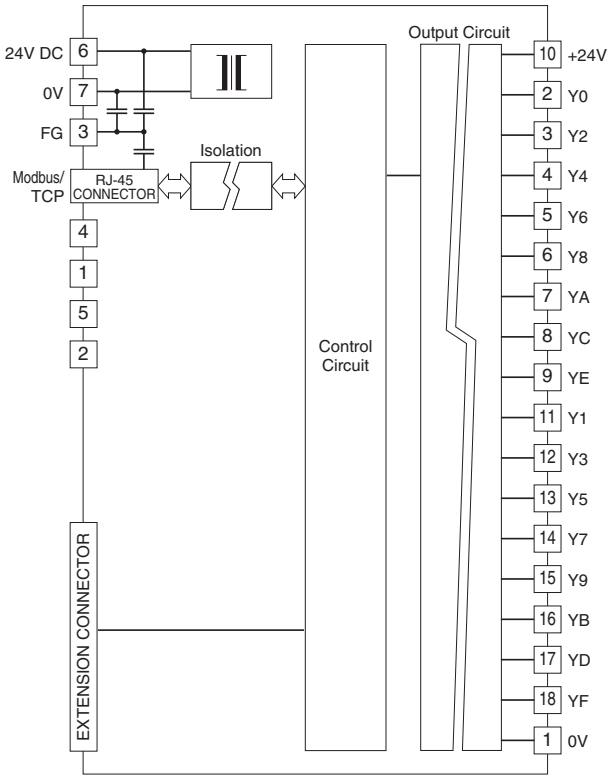

■ Output Circuit

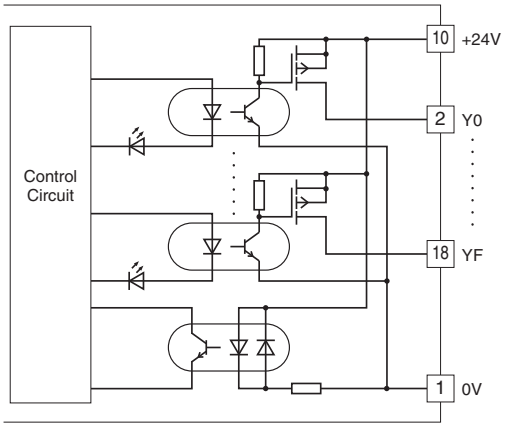

■ Output Connection Example

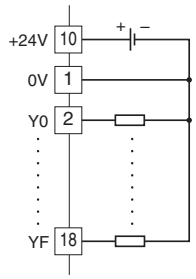

MG CO., LTD.
www.mgco.jp

DC VOLTAGE/CURRENT INPUT MODULE, 4 points

MODEL: R7E-SV4

SPECIFICATIONS

Isolation: Input 0 to input 1 to input 2 to input 3 to Ethernet to FG to power input

Converted data range: 0 – 10000 of the input range

• Input range

Wide span voltage: -10 – +10 V DC, -5 – +5 V DC, 0 – 10 V DC, 0 – 5 V DC, 1 – 5 V DC

Narrow span voltage: -1 – +1 V DC, 0 – 1 V DC, -0.5 – +0.5 V DC

Current range: -20 – +20 mA DC, 0 – 20 mA DC, 4 – 20 mA DC

• Input resistance

Wide span voltage: ≥ 1 MΩ

Narrow span voltage: ≥ 100 kΩ

Current range: 70 Ω

Conversion rate / conversion accuracy: 10 msec./±0.8 %, 20 msec./±0.4 %, 40 msec./±0.2 %, 80 msec./±0.1 %

Response time: Conversion rate × 2 + 50 msec. (0 – 90 %)

Temperature coefficient: ±0.015 %/°C (±0.008 %/°F)

OPERATING MODE SETTING

(*) Factory setting

• Input Range (SW1-5, 1-6, 1-7, 1-8)

SW1-5	SW1-6	SW1-7	SW1-8	Input range
OFF	OFF	OFF	OFF	-10 – +10 V DC (*)
ON	OFF	OFF	OFF	-5 – +5 V DC
OFF	ON	OFF	OFF	-1 – +1 V DC
ON	ON	OFF	OFF	0 – 10 V DC
OFF	OFF	ON	OFF	0 – 5 V DC
ON	OFF	ON	OFF	1 – 5 V DC
OFF	ON	ON	OFF	0 – 1V DC
ON	ON	ON	OFF	-0.5 – +0.5 V DC
ON	OFF	OFF	ON	-20 – +20 mA DC
OFF	ON	OFF	ON	4 – 20 mA DC
ON	ON	OFF	ON	0 – 20 mA DC
ON	ON	ON	ON	PC Configurator setting

• Conversion Rate / Accuracy (SW1-3, 1-4)

SW1-3	SW1-4	Conversion rate / Accuracy
OFF	OFF	80 msec. / ±0.1% (*)
ON	OFF	40 msec. / ±0.2%
OFF	ON	20 msec. / ±0.4%
ON	ON	10 msec. / ±0.8%

• Extension (SW1-1, 1-2)

SW1-1	SW1-2	Extension
OFF	OFF	No extension (*)
ON	OFF	Discrete input, 8 or 16 points
OFF	ON	Discrete output, 8 or 16 points

TERMINAL ASSIGNMENTS

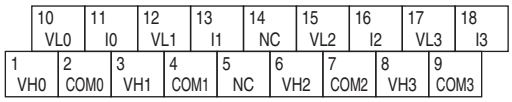

NO.	ID	FUNCTION	NO.	ID	FUNCTION
1	VH0	Wide span volt. 0	10	VL0	Narrow span volt. 0
2	COM0	Common 0	11	I0	Current range 0
3	VH1	Wide span volt. 1	12	VL1	Narrow span volt. 1
4	COM1	Common 1	13	I1	Current range 1
5	NC	No connection	14	NC	No connection
6	VH2	Wide span volt. 2	15	VL2	Narrow span volt. 2
7	COM2	Common 2	16	I2	Current range 2
8	VH3	Wide span volt. 3	17	VL3	Narrow span volt. 3
9	COM3	Common 3	18	I3	Current range 3

CIRCUIT DIAGRAM

Note: In order to improve EMC performance, bond the FG terminal to ground.

Caution: FG terminal is NOT a protective conductor terminal.

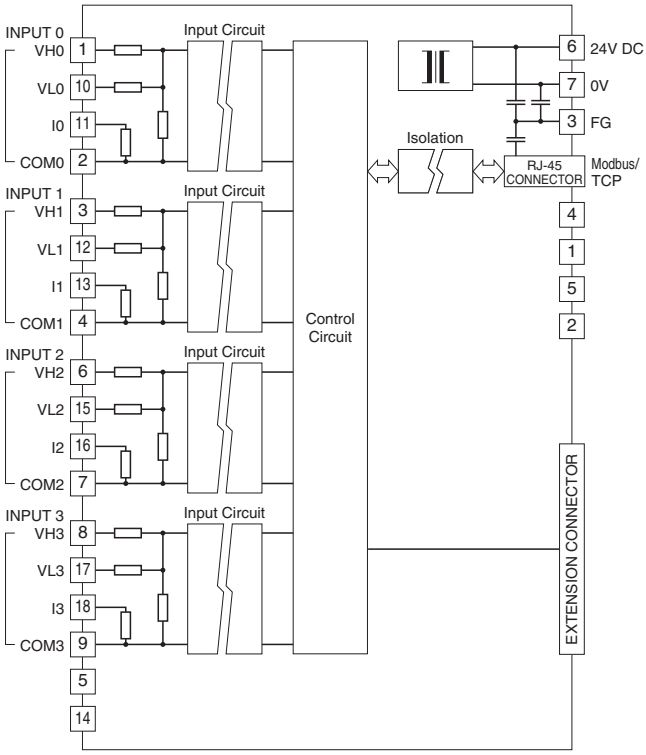

■ Input Connection Examples

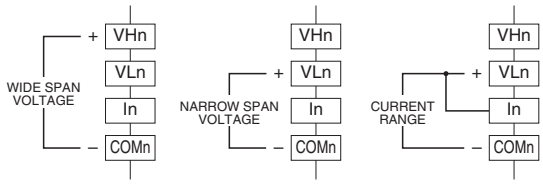

Be sure to close across VLn and In terminals for a current input.

MG CO., LTD.
www.mgco.jp

THERMOCOUPLE INPUT MODULE, 4 points

MODEL: R7E-TS4

SPECIFICATIONS

Isolation: Input 0 to input 1 to input 2 to input 3 to Ethernet to FG to power input
Converted data range: Engineering unit value (°C, K) × 10 (integer); No multiplication for °F
Linearization: Standard
Thermocouple: K, E, J, T, B, R, S, C, N, U, L, P, PR
Cold junction compensation: CJC sensor attached to the input terminals
Input resistance: ≥ 30 kΩ
Burnout sensing: ≤ 0.1 μA
Conversion accuracy: ±1°C (±1.8°F);
±2.0°C (±3.6°F) for B, R, S, C, PR
Conversion rate: 250 msec. or 1 sec.
Response time: Conversion rate × 2 + 50 msec. (0 – 90 %)
Temperature coefficient: ±0.015 %/°C (±0.008 %/°F) of max. span
CJC error: ±1.0°C at 25°C ±10°C
(±1.8°F at 77°F ±18°F)
±1.5°C (±2.7°F) for R, S, PR

T/C	BURNOUT INDICATION (°C)		CONFORMANCE RANGE (°C)
	Downscale	Upscale	
K (CA)	-272	+1472	-150 to +1370
E (CRC)	-272	+1120	-170 to +1000
J (IC)	-260	+1300	-180 to +1200
T (CC)	-272	+ 500	-170 to + 400
B (RH)	24	1920	1000 to 1760
R	-100	+1860	380 to 1760
S	-100	+1860	400 to 1760
C (WRe 5-26)	-52	+2416	100 to 2315
N	-272	+1400	-130 to +1300
U	-252	+ 700	-200 to +600
L	-252	+1000	-200 to +900
P (Platinel II)	-52	+1496	0 to 1395
(PR)	-52	+1860	300 to 1760

T/C	BURNOUT INDICATION (°F)		CONFORMANCE RANGE (°F)
	Downscale	Upscale	
K (CA)	-458	+2682	-238 to +2498
E (CRC)	-458	+2048	-274 to +1832
J (IC)	-436	+2372	-292 to +2192
T (CC)	-458	+932	-274 to +752
B (RH)	75	3488	1832 to 3200
R	-148	+3380	716 to 3200
S	-148	+3380	752 to 3200
C (WRe 5-26)	-62	+4381	212 to 4199
N	-458	+2552	-202 to +2372
U	-422	+1292	-328 to +1112
L	-422	+1832	-328 to +1652
P (Platinel II)	-62	+2725	32 to 2543
(PR)	-62	+3380	572 to 3200

OPERATING MODE SETTING

(*) Factory setting

• Thermocouple Type (SW1-5, 1-6, 1-7, 1-8)

SW1-5	SW1-6	SW1-7	SW1-8	Thermocouple type
OFF	OFF	OFF	OFF	K (CA) (*)
ON	OFF	OFF	OFF	E (CRC)
OFF	ON	OFF	OFF	J (IC)
ON	ON	OFF	OFF	T (CC)
OFF	OFF	ON	OFF	B (RH)
ON	OFF	ON	OFF	R
OFF	ON	ON	OFF	S
ON	ON	ON	OFF	C (WRe 5-26)
OFF	OFF	OFF	ON	N
ON	OFF	OFF	ON	U
OFF	ON	OFF	ON	L
ON	ON	OFF	ON	P (Platinel II)
OFF	OFF	ON	ON	(PR)
ON	ON	ON	ON	PC Configurator setting

• Conversion Rate (SW1-3)

SW1-3	Conversion rate
OFF	250 msec. (*)
ON	1 sec.

• Burnout (SW1-4)

SW1-4	Burnout
OFF	Upscale (*)
ON	Downscale

• Extension (SW1-1, 1-2)

SW1-1	SW1-2	Extension
OFF	OFF	No extension (*)
ON	OFF	Discrete input, 8 or 16 points
OFF	ON	Discrete output, 8 or 16 points

TERMINAL ASSIGNMENTS

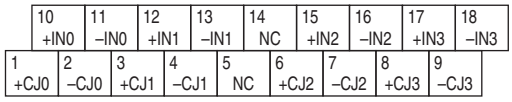

NO.	ID	FUNCTION	NO.	ID	FUNCTION
1	+CJ0	CJC + 0	10	+IN0	T/C + 0
2	–CJ0	CJC – 0	11	–IN0	T/C – 0
3	+CJ1	CJC + 1	12	+IN1	T/C + 1
4	–CJ1	CJC – 1	13	–IN1	T/C – 1
5	NC	No connection	14	NC	No connection
6	+CJ2	CJC + 2	15	+IN2	T/C + 2
7	–CJ2	CJC – 2	16	–IN2	T/C – 2
8	+CJ3	CJC + 3	17	+IN3	T/C + 3
9	–CJ3	CJC – 3	18	–IN3	T/C – 3

MG CO., LTD.
www.mgco.jp

CIRCUIT DIAGRAM

Note: In order to improve EMC performance, bond the FG terminal to ground.
Caution: FG terminal is NOT a protective conductor terminal.

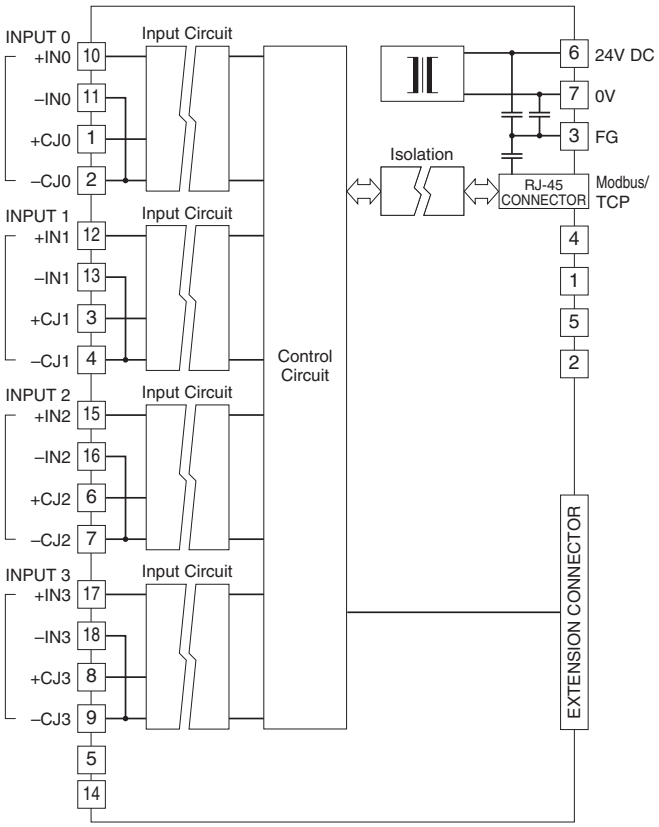

■ Input Connection Example

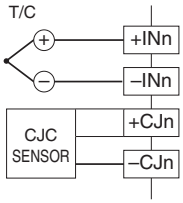

RTD INPUT MODULE, 4 points

MODEL: R7E-RS4

SPECIFICATIONS

Isolation: Input 0 to input 1 to input 2 to input 3 to Ethernet to FG to power input
Converted data range: Engineering unit value (°C, K) × 10 (integer); No multiplication for °F
Linearization: Standard
RTD: Pt 100 (JIS '97, IEC), Pt 100 (JIS '89), JPt 100 (JIS '89), Pt 50 Ω (JIS '81), Ni 100, Cu 10, Cu 50
Sensing current: ≤ 1 mA
Input resistance: ≥ 1 MΩ
Maximum leadwire resistance: 100 Ω per wire
Conversion accuracy: ±1°C (±1.8°F);
±3°C (±5.4°F) for Cu 10
Conversion rate: 250 msec. or 1 sec.
Response time: Conversion rate × 2 + 50 msec. (0 – 90 %)
Temperature coefficient: ±0.015 %/°C (±0.008 %/°F) of max. span except ±0.150 %/°C (±0.08 %/°F) for Cu 10 @ 25°C

RTD	BURNOUT INDICATION (°C)		CONFORMANCE RANGE (°C)
	Downscale	Upscale	
Pt 100 (JIS '97, IEC)	-240	+900	-200 to +850
Pt 100 (JIS '89)	-240	+900	-200 to +660
JPt 100 (JIS '89)	-236	+560	-200 to +510
Pt 50 Ω (JIS '81)	-236	+700	-200 to +649
Ni 100	-100	+252	-80 to +250
Cu 10 @ 25°C	-212	+312	-50 to +250
Cu 50	-100	+200	-50 to +150

RTD	BURNOUT INDICATION (°F)		CONFORMANCE RANGE (°F)
	Downscale	Upscale	
Pt 100 (JIS '97, IEC)	-400	+1652	-328 to +1562
Pt 100 (JIS '89)	-400	+1652	-328 to +1220
JPt 100 (JIS '89)	-393	+1040	-328 to +950
Pt 50 Ω (JIS '81)	-393	+1292	-328 to +1200
Ni 100	-148	+486	-112 to +482
Cu 10 @ 25°C	-350	+594	-58 to +482
Cu 50	-148	+392	-58 to +302

OPERATING MODE SETTING

(*) Factory setting

• RTD Type (SW1-5, 1-6, 1-7, 1-8)

SW1-5	SW1-6	SW1-7	SW1-8	RTD Type
OFF	OFF	OFF	OFF	Pt 100 (JIS '97, IEC) (*)
ON	OFF	OFF	OFF	Pt 100 (JIS '89)
OFF	ON	OFF	OFF	JPt 100 (JIS '89)
ON	ON	OFF	OFF	Pt 50 Ω (JIS '81)
OFF	OFF	ON	OFF	Ni 100
ON	OFF	ON	OFF	Cu 10 @ 25°C
OFF	OFF	OFF	ON	Cu 50
ON	ON	ON	ON	PC Configurator setting

• Conversion Rate (SW1-3)

SW1-3	Conversion rate
OFF	250 msec. (*)
ON	1 sec.

• Burnout (SW1-4)

SW1-4	Burnout
OFF	Upscale (*)
ON	Downscale

• Extension (SW1-1, 1-2)

SW1-1	SW1-2	Extension
OFF	OFF	No extension (*)
ON	OFF	Discrete input, 8 or 16 points
OFF	ON	Discrete output, 8 or 16 points

TERMINAL ASSIGNMENTS

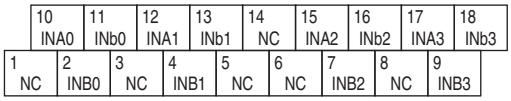

NO.	ID	FUNCTION	NO.	ID	FUNCTION
1	NC	No connection	10	INA0	RTD 0-A
2	INB0	RTD 0-B	11	INb0	RTD 0-b
3	NC	No connection	12	INA1	RTD 1-A
4	INB1	RTD 1-B	13	INb1	RTD 1-b
5	NC	No connection	14	NC	No connection
6	NC	No connection	15	INA2	RTD 2-A
7	INB2	RTD 2-B	16	INb2	RTD 2-b
8	NC	No connection	17	INA3	RTD 3-A
9	INB3	RTD 3-B	18	INb3	RTD 3-b

MG CO., LTD.
www.mgco.jp

CIRCUIT DIAGRAM

Note: In order to improve EMC performance, bond the FG terminal to ground.
Caution: FG terminal is NOT a protective conductor terminal.

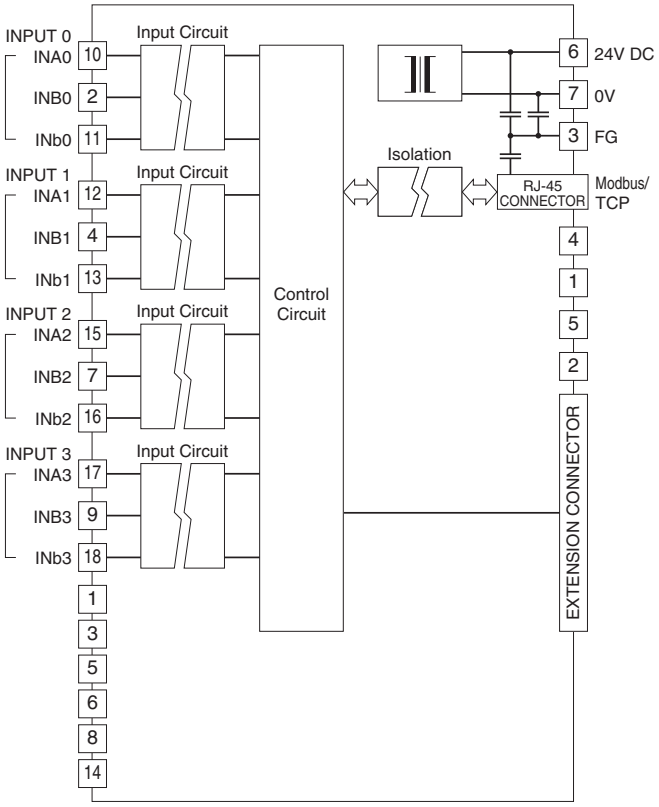

■ Input Connection Example

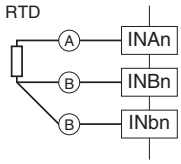

POTENTIOMETER INPUT MODULE, 4 points

MODEL: R7E-MS4

SPECIFICATIONS

Isolation: Input 0 to input 1 to input 2 to input 3 to Ethernet to FG to power input
Converted data range: 0 – 10000 of the input range
Potentiometer: Total resistance 100 Ω – 20 kΩ
Minimum span: 50 % of total resistance
Excitation: Approx. 0.2 V DC
Conversion rate / conversion accuracy:
10 msec./±0.8 %, 20 msec./±0.4 %, 40 msec./±0.2 %, 80 msec./±0.1 %
Response time: Conversion rate × 2 + 50 msec. (0 – 90 %)
Temperature coefficient: ±0.015 %/°C (±0.008 %/°F)

OPERATING MODE SETTING

(*) Factory setting
Note: Be sure to set unused SW1-5 through 1-8 to OFF.

• Conversion Rate / Accuracy (SW1-3, 1-4)

SW1-3	SW1-4	Conversion rate / Accuracy
OFF	OFF	80 msec. / ±0.1% (*)
ON	OFF	40 msec. / ±0.2%
OFF	ON	20 msec. / ±0.4%
ON	ON	10 msec. / ±0.8%

• Extension (SW1-1, 1-2)

SW1-1	SW1-2	Extension
OFF	OFF	No extension (*)
ON	OFF	Discrete input, 8 or 16 points
OFF	ON	Discrete output, 8 or 16 points

TERMINAL ASSIGNMENTS

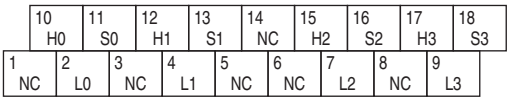

NO.	ID	FUNCTION	NO.	ID	FUNCTION
1	NC	No connection	10	H0	Pot H0
2	L0	Pot L0	11	S0	Pot S0
3	NC	No connection	12	H1	Pot H1
4	L1	Pot L1	13	S1	Pot S1
5	NC	No connection	14	NC	No connection
6	NC	No connection	15	H2	Pot H2
7	L2	Pot L2	16	S2	Pot S2
8	NC	No connection	17	H3	Pot H3
9	L3	Pot L3	18	S3	Pot S3

CIRCUIT DIAGRAM

Note: In order to improve EMC performance, bond the FG terminal to ground.
Caution: FG terminal is NOT a protective conductor terminal.

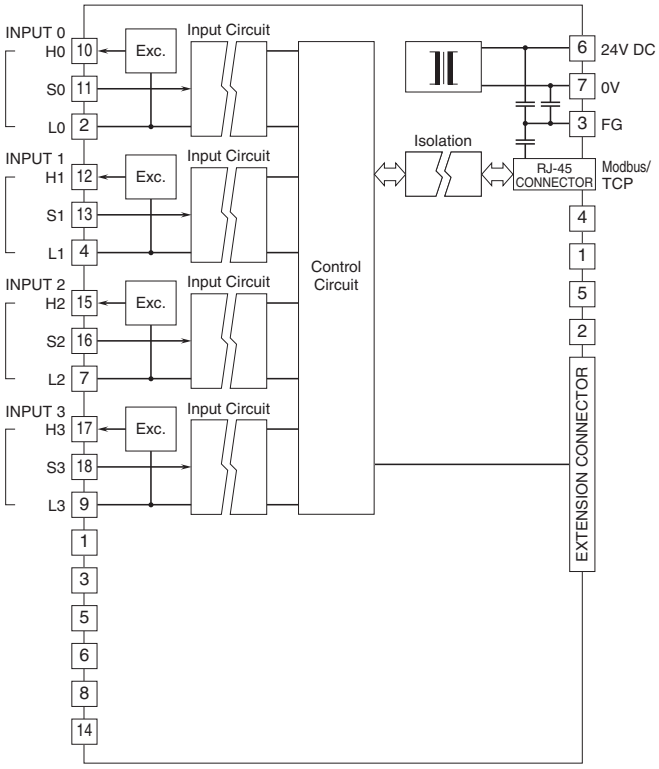

■ Input Connection Example

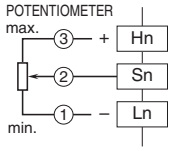

MG CO., LTD.
www.mgco.jp

AC CURRENT INPUT MODULE, 4 points

(clamp-on current sensor CLSE use)

MODEL: R7E-CT4E

SPECIFICATIONS

Isolation: Input 0 to input 1 to input 2 to input 3 to Ethernet to FG to power input

Converted data range:
Engineering unit value (A) × 100 (Integer)
(Engineering unit value (A) × 1000 (Integer) for CLSE-R5)

Input range (Optional)
CLSE-R5: 0 – 5 A AC
CLSE-05: 0 – 50 A AC
CLSE-10: 0 – 100 A AC
CLSE-20: 0 – 200 A AC
CLSE-40: 0 – 400 A AC
CLSE-60: 0 – 600 A AC

Frequency: 50/60 Hz

Overload capacity: 120 % continuous

Operational range: 5 – 115 % of rating (Operational range for the CLSE-60 is limited up to approx. 109 % (65535).)
(Note: Use for the circuit not exceed 480 V)

Conversion rate / conversion accuracy:
10 msec./±2.0 %, 20 msec./±1.0 %, 40 msec./±0.5 %, 80 msec./±0.5 %
(The conversion accuracy does not include the accuracy of the sensor.)

Response time: ≤ 1.0 sec. (0 – 90 %)

Temperature coefficient: ±0.015 %/°C (±0.008 %/°F)

OPERATING MODE SETTING

(*) Factory setting

• Input Range (SW1-5, 1-6, 1-7, 1-8)

SW1-5	SW1-6	SW1-7	SW1-8	Input range
OFF	OFF	OFF	OFF	CLSE-60 (*)
ON	OFF	OFF	OFF	CLSE-40
OFF	ON	OFF	OFF	CLSE-20
ON	ON	OFF	OFF	CLSE-10
OFF	OFF	ON	OFF	CLSE-05
ON	OFF	ON	OFF	CLSE-R5
ON	ON	ON	ON	PC Configurator setting

• Conversion Rate / Accuracy (SW1-3, 1-4)

SW1-3	SW1-4	Conversion rate / Accuracy
OFF	OFF	80 msec. / ±0.5% (*)
ON	OFF	40 msec. / ±0.5%
OFF	ON	20 msec. / ±1.0%
ON	ON	10 msec. / ±2.0%

• Extension (SW1-1, 1-2)

SW1-1	SW1-2	Extension
OFF	OFF	No extension (*)
ON	OFF	Discrete input, 8 or 16 points
OFF	ON	Discrete output, 8 or 16 points

TERMINAL ASSIGNMENTS

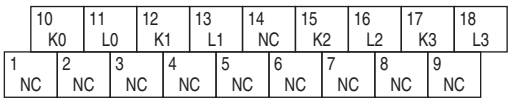

NO.	ID	FUNCTION	NO.	ID	FUNCTION
1	NC	No connection	10	K0	AC current K0
2	NC	No connection	11	L0	AC current L0
3	NC	No connection	12	K1	AC current K1
4	NC	No connection	13	L1	AC current L1
5	NC	No connection	14	NC	No connection
6	NC	No connection	15	K2	AC current K2
7	NC	No connection	16	L2	AC current L2
8	NC	No connection	17	K3	AC current K3
9	NC	No connection	18	L3	AC current L3

MG CO., LTD.
www.mgco.jp

CIRCUIT DIAGRAM

Note: In order to improve EMC performance, bond the FG terminal to ground.
Caution: FG terminal is NOT a protective conductor terminal.

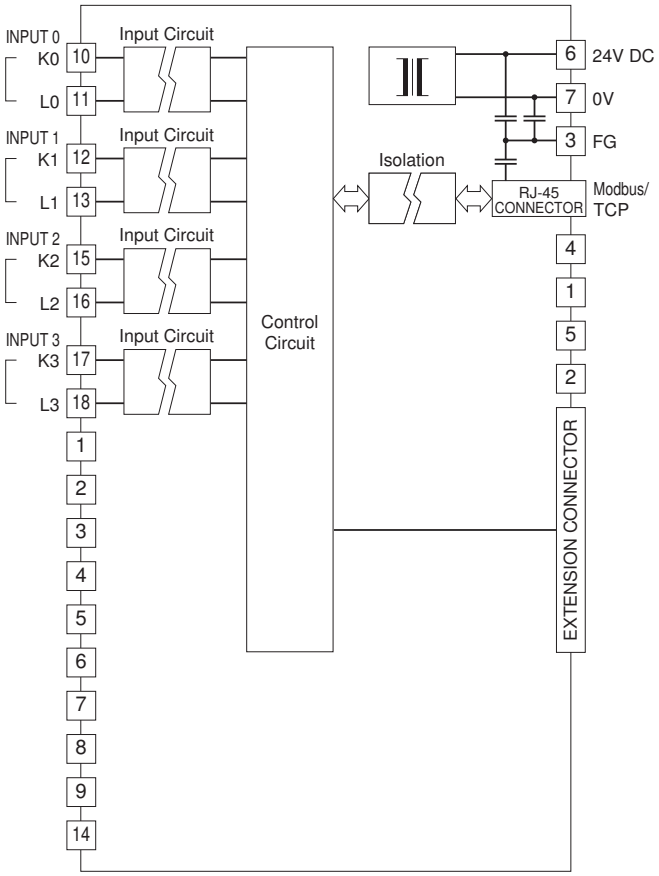

Input Connection Example

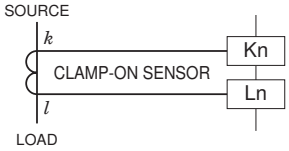

TOTALIZED PULSE INPUT MODULE, 8 points

MODEL: R7E-PA8

SPECIFICATIONS

Common: Positive or negative common (NPN/PNP) per 8 points
Number of I/O: Input, 8 points
Pulse Input status indicator: LED turns ON with contact ON
Isolation: Input to Ethernet to FG to power input
■ **Excitation (PNP, NPN input)**
Sensing voltage: 24 V DC ±10 %; ripple 5 %p-p max
ON voltage / ON current: ≥ 16 V DC (input terminal - Cx) / ≤ 3.7 mA
OFF voltage / OFF current: ≤ 5 V DC (input terminal - Cx) / ≤ 1 mA
Voltage pulse input
ON voltage / ON current: ≥ 16 V DC (input terminal - Cx) / ≤ 3.7 mA
OFF voltage / OFF current: ≤ 5 V DC (input terminal - Cx) / ≤ 1 mA
Input current: ≤ 5.5 mA per point at 24 V DC
Input resistance: Approx. 4.4 kΩ
ON delay: ≤ 2.0 msec.
OFF delay: ≤ 2.0 msec.
Max. Frequency: 100 Hz (This unit is designed to be able to accept a frequency up to 100 Hz, however,'chattering' contact must be avoided for accurate measuring of such high frequency. Use relays that do not cause any chattering.)
Minimum ON/OFF pulse requirements: 5 msec.
Accumulated pulse count: 0 - 4 294 967 295
Max. accumulated pulse count: 1 000 - 4 294 967 295 (Factory default: 9 999 999)
Overflow: 0 or 1 (Factory default: 0)

OPERATING MODE SETTING

(*) Factory setting
Note: Be sure to set unused SW1-3 through 1-8 to OFF.

• Extension (SW1-1, 1-2)

SW1-1	SW1-2	Extension
OFF	OFF	No extension (*)
ON	OFF	Discrete input, 8 or 16 points
OFF	ON	Discrete output, 8 or 16 points

TERMINAL ASSIGNMENTS

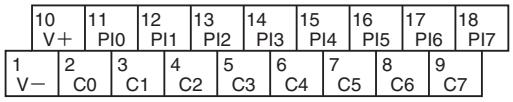

NO.	ID	FUNCTION	NO.	ID	FUNCTION
1	V –	Excitation (–)	10	V +	Excitation (+)
2	C0	Common	11	PI0	Input 0
3	C1	Common	12	PI1	Input 1
4	C2	Common	13	PI2	Input 2
5	C3	Common	14	PI3	Input 3
6	C4	Common	15	PI4	Input 4
7	C5	Common	16	PI5	Input 5
8	C6	Common	17	PI6	Input 6
9	C7	Common	18	PI7	Input 7

MG CO., LTD.
www.mgco.jp

CIRCUIT DIAGRAM

Caution: FG terminal is NOT a protective conductor terminal.

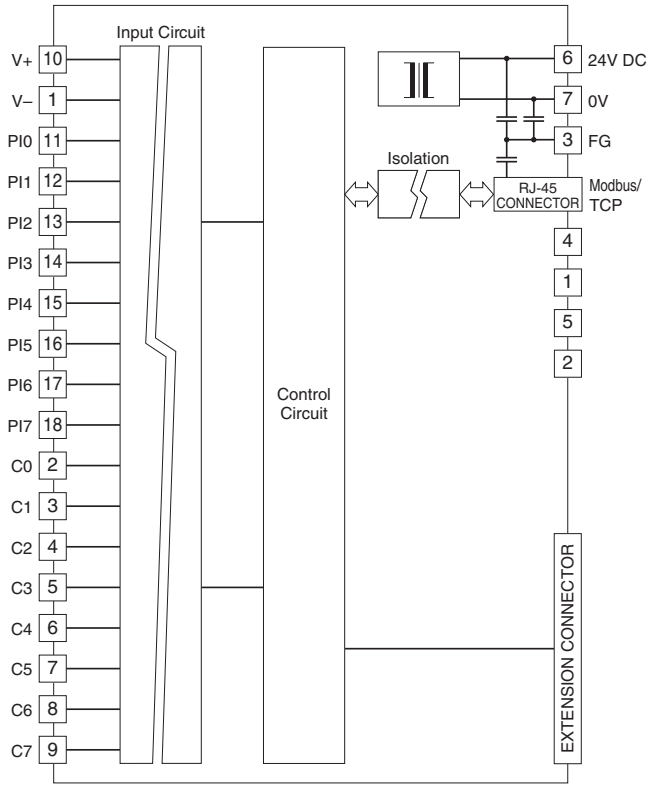

■ **Input Circuit**

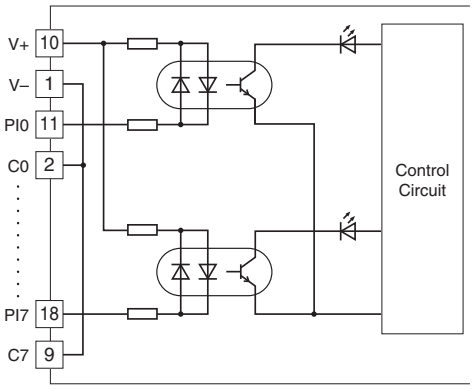

■ **Input Connection Examples**

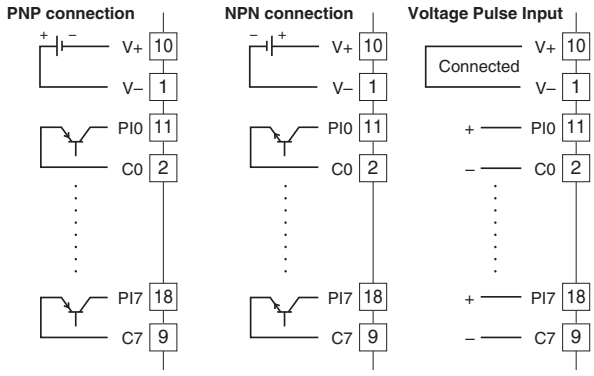

MG CO., LTD.
www.mgco.jp

DC VOLTAGE OUTPUT MODULE, 2 points

MODEL: R7E-YV2

SPECIFICATIONS

Isolation: Output 0 to output 1 to Ethernet to FG to power input
Converted data range: 0 – 10000 of the output range
Output range
Wide span voltage: -10 – +10 V DC, -5 – +5 V DC, 0 – 10 V DC, 0 – 5 V DC, 1 – 5 V DC
Narrow span voltage: -1 – +1 V DC, 0 – 1 V DC, -0.5 – +0.5 V DC
Operational range: -15 – +115 % of the output range (except -10 – +10 V DC);
approx. -11.5 – +11.5 V DC (-10 – +10 V DC)
Load resistance: ≥ 100 kΩ
Conversion accuracy: ±0.1 %
Response time: 250 msec. (0 – 90 %)
Temperature coefficient: ±0.015 %/°C (±0.008 %/°F)

OPERATING MODE SETTING

(*) Factory setting
Note: Be sure to set unused SW1-3 to OFF.

• Output Range (SW1-5, 1-6, 1-7, 1-8)

SW1-5	SW1-6	SW1-7	SW1-8	Output range
OFF	OFF	OFF	OFF	-10 – +10 V DC (*)
ON	OFF	OFF	OFF	-5 – +5 V DC
OFF	ON	OFF	OFF	-1 – +1 V DC
ON	ON	OFF	OFF	0 – 10 V DC
OFF	OFF	ON	OFF	0 – 5 V DC
ON	OFF	ON	OFF	1 – 5 V DC
OFF	ON	ON	OFF	0 – 1 V DC
ON	ON	ON	OFF	-0.5 – +0.5 V DC
ON	ON	ON	ON	PC Configurator setting

• Output at the Loss of Communication (SW1-4)

SW1-4	Output at the loss of communication
OFF	Reset the output (to -15% or approx. -11.5V DC)
ON	Hold the output (*) (maintains the last data received normally)

• Extension (SW1-1, 1-2)

SW1-1	SW1-2	Extension
OFF	OFF	No extension (*)
ON	OFF	Discrete input, 8 or 16 points
OFF	ON	Discrete output, 8 or 16 points

TERMINAL ASSIGNMENTS

NO.	ID	FUNCTION	NO.	ID	FUNCTION
1	NC	No connection	6	NC	No connection
2	COM0	Common 0	7	VH0	Wide span volt. 0
3	COM0	Common 0	8	VL0	Narrow span volt. 0
4	COM1	Common 1	9	VH1	Wide span volt. 1
5	COM1	Common 1	10	VL1	Narrow span volt. 1

CIRCUIT DIAGRAM

Note: In order to improve EMC performance, bond the FG terminal to ground.
Caution: FG terminal is NOT a protective conductor terminal.

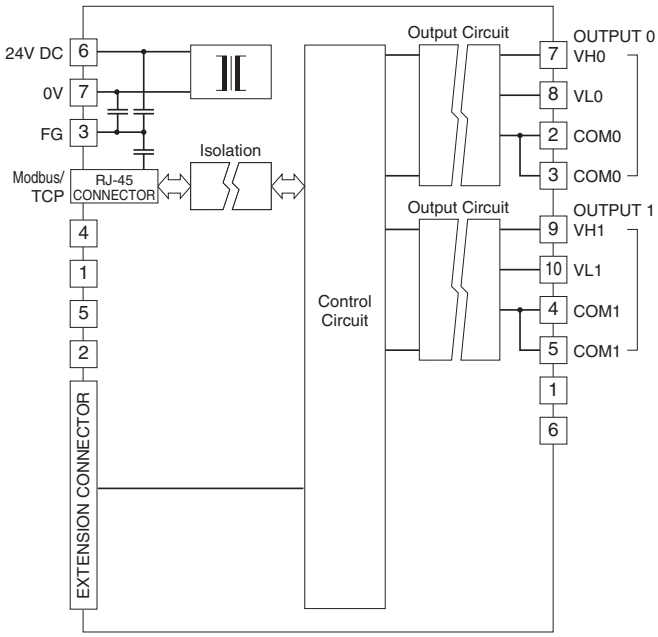

■ Output Connection Examples

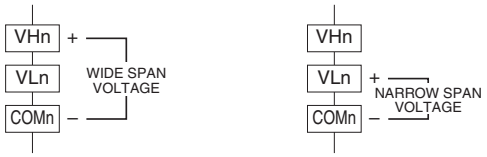

MG CO., LTD.
www.mgco.jp

DC CURRENT OUTPUT MODULE, 2 points

MODEL: R7E-YS2

SPECIFICATIONS

Isolation: Output 0 to output 1 to Ethernet to FG to power input
Converted data range: 0 – 10000 of the output range
Output range: 4 – 20 mA DC
Load resistance: ≤ 600Ω
Conversion accuracy: ±0.1 %
Response time: 250 msec. (0 – 90 %)
Temperature coefficient: ±0.015 %/°C (±0.008 %/°F)

OPERATING MODE SETTING

(*) Factory setting
Note: Be sure to set unused SW1-3 and 1-5 through 1-8 to OFF.

• Output at the Loss of Communication (SW1-4)

SW1-4	Output at the loss of communication
OFF	Reset the output (to -15%)
ON	Hold the output (*) (maintains the last data received normally)

• Extension (SW1-1, 1-2)

SW1-1	SW1-2	Extension
OFF	OFF	No extension (*)
ON	OFF	Discrete input, 8 or 16 points
OFF	ON	Discrete output, 8 or 16 points

TERMINAL ASSIGNMENTS

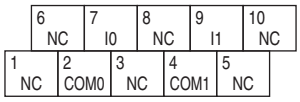

NO.	ID	FUNCTION	NO.	ID	FUNCTION
1	NC	No connection	6	NC	No connection
2	COM0	Common 0	7	I0	Current 0
3	NC	No connection	8	NC	No connection
4	COM1	Common 1	9	I1	Current 1
5	NC	No connection	10	NC	No connection

CIRCUIT DIAGRAM

Note: In order to improve EMC performance, bond the FG terminal to ground.
Caution: FG terminal is NOT a protective conductor terminal.

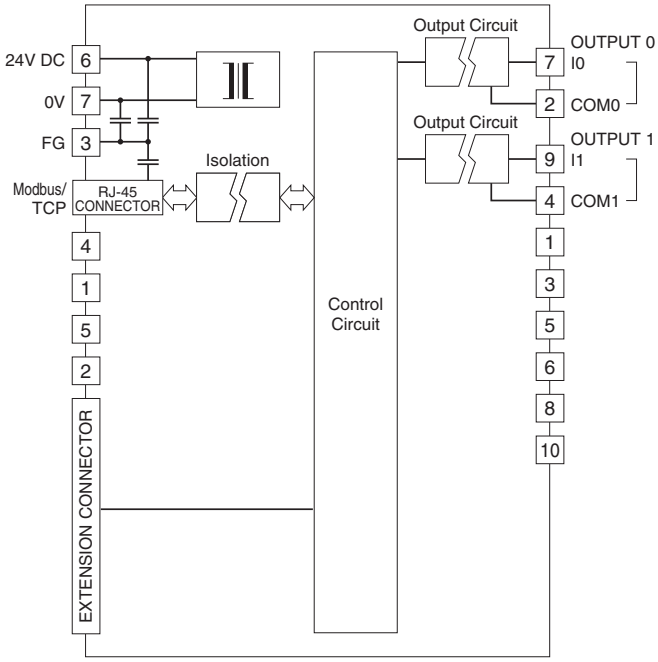

MG CO., LTD.
www.mgco.jp

DISCRETE INPUT EXTENSION MODULE, 8 points

MODEL: R7E-EA8

SPECIFICATIONS

Common: Positive or negative common (NPN/PNP) per 8 points
Number of I/O: Input, 8 points
Maximum inputs applicable at once: No limit (at 24 V DC)
Input status indicator: LED turns ON with contact ON
Isolation: Input to internal circuits
Rated input voltage: 24 V DC ±10 %; ripple 5 %p-p max.
ON voltage / current: ≥ 15 V DC (input – COM) / ≥ 3.5 mA
OFF voltage / current: ≤ 5 V DC (input – COM) / ≤ 1 mA
Input current: ≤ 5.5 mA per point at 24 V DC
Input resistance: Approx. 4.4 kΩ
ON delay: ≤ 2.0 msec.
OFF delay: ≤ 2.0 msec.

TERMINAL ASSIGNMENTS

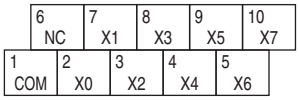

NO.	ID	FUNCTION	NO.	ID	FUNCTION
1	COM	Common	6	NC	No Connection
2	X0	Input 0	7	X1	Input 1
3	X2	Input 2	8	X3	Input 3
4	X4	Input 4	9	X5	Input 5
5	X6	Input 6	10	X7	Input 7

CIRCUIT DIAGRAM

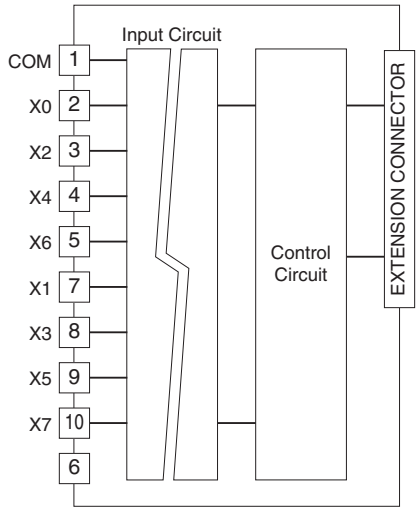

■ **Input Circuit**

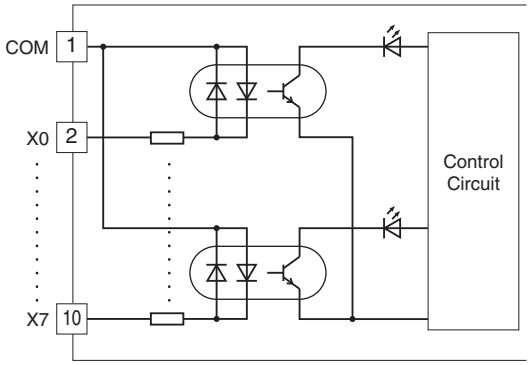

■ **Input Connection Examples**

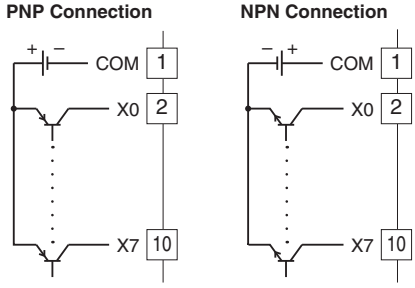

MG CO., LTD.
www.mgco.jp

DISCRETE INPUT EXTENSION MODULE, 16 points

MODEL: R7E-EA16

SPECIFICATIONS

Common: Positive or negative common (NPN/PNP) per 16 points
Number of I/O: Input, 16 points
Maximum inputs applicable at once: No limit (at 24 V DC)
Input status indicator: LED turns ON with contact ON
Isolation: Input to internal circuits
Rated input voltage: 24 V DC ±10 %; ripple 5 %p-p max.
ON voltage / current: ≥ 15 V DC (input – COM) / ≥ 3.5 mA
OFF voltage / current: ≤ 5 V DC (input – COM) / ≤ 1 mA
Input current: ≤ 5.5 mA per point at 24 V DC
Input resistance: Approx. 4.4 kΩ
ON delay: ≤ 2.0 msec.
OFF delay: ≤ 2.0 msec.

TERMINAL ASSIGNMENTS

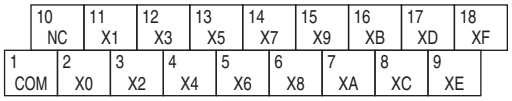

NO.	ID	FUNCTION	NO.	ID	FUNCTION
1	COM	Common	10	NC	No Connection
2	X0	Input 0	11	X1	Input 1
3	X2	Input 2	12	X3	Input 3
4	X4	Input 4	13	X5	Input 5
5	X6	Input 6	14	X7	Input 7
6	X8	Input 8	15	X9	Input 9
7	XA	Input 10	16	XB	Input 11
8	XC	Input 12	17	XD	Input 13
9	XE	Input 14	18	XF	Input 15

CIRCUIT DIAGRAM

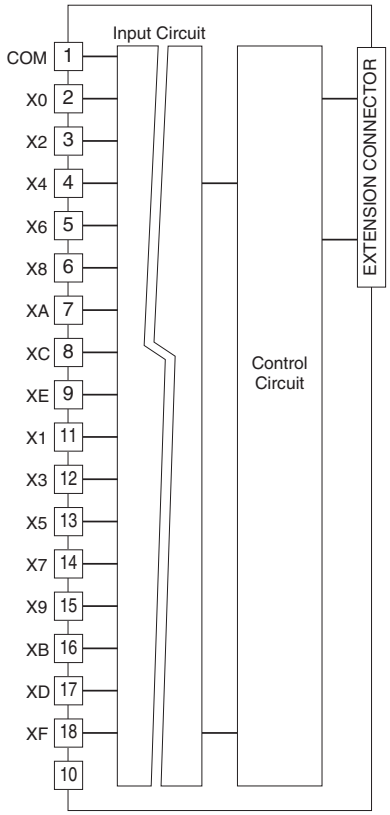

■ **Input Circuit**

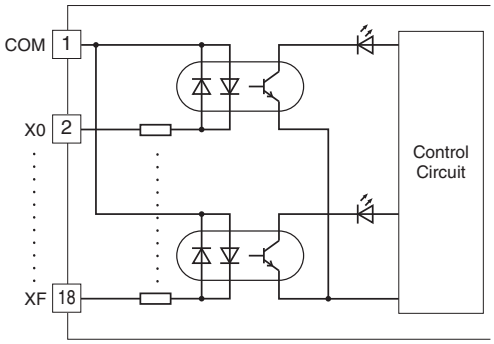

■ **Input Connection Examples**

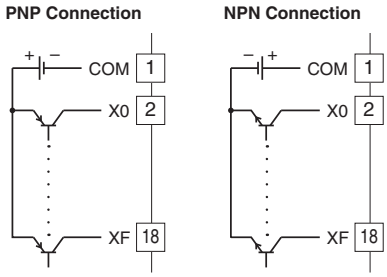

MG CO., LTD.
www.mgco.jp

NPN TRANSISTOR OUTPUT EXTENSION MODULE, 8 points

MODEL: R7E-EC8A

SPECIFICATIONS

Common: Negative common (NPN) per 8 points
Number of I/O: Output, 8 points
Maximum outputs applicable at once: No limit (at 24 V DC)
Output status indicator: LED turns ON with contact ON
Isolation: Output to internal circuits
Rated load voltage: 24 V DC ±10 %
Rated output current: 0.25 A per point, 2.0 A per common
Residual voltage: ≤ 1.2 V
Leakage current: ≤ 0.1 mA
ON delay: ≤ 0.5 msec.
OFF delay: ≤ 1.5 msec.
(When driving an inductive load, connect a diode in parallel with the load.)

TERMINAL ASSIGNMENTS

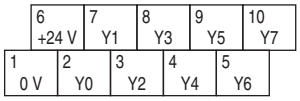

NO.	ID	FUNCTION	NO.	ID	FUNCTION
1	0 V	0 V (common)	6	+24 V	24 V DC
2	Y0	Output 0	7	Y1	Output 1
3	Y2	Output 2	8	Y3	Output 3
4	Y4	Output 4	9	Y5	Output 5
5	Y6	Output 6	10	Y7	Output 7

CIRCUIT DIAGRAM

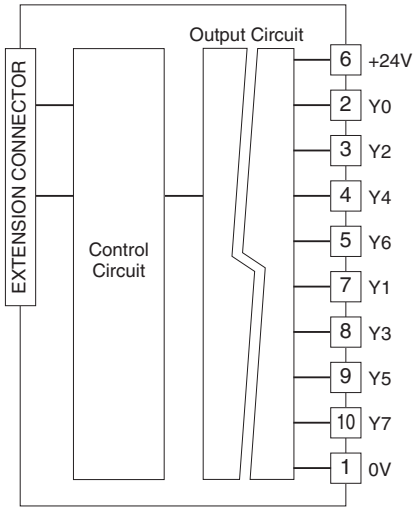

■ **Output Circuit**

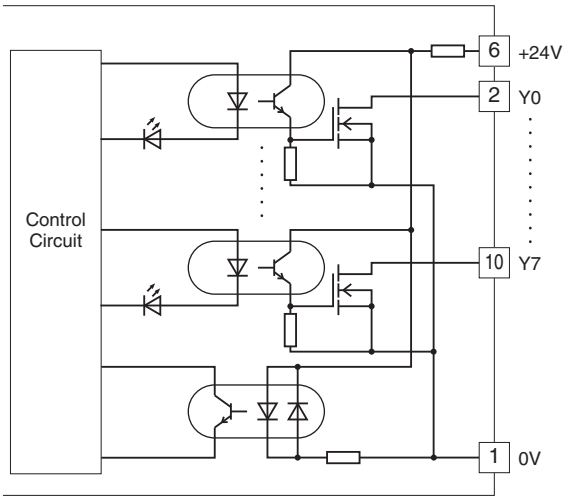

■ **Output Connection Example**

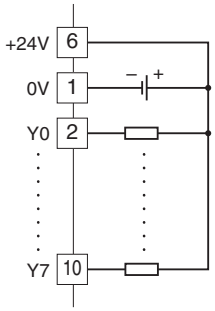

MG CO., LTD.
www.mgco.jp

NPN TRANSISTOR OUTPUT EXTENSION MODULE, 16 points

MODEL: R7E-EC16A

SPECIFICATIONS

Common: Negative common (NPN) per 16 points
Number of I/O: Output, 16 points
Maximum outputs applicable at once: No limit (at 24 V DC)
Output status indicator: LED turns ON with contact ON
Isolation: Output to internal circuits
Rated load voltage: 24 V DC ±10 %
Rated output current: 0.25 A per point, 2.0 A per common
Residual voltage: ≤ 1.2 V
Leakage current: ≤ 0.1 mA
ON delay: ≤ 0.5 msec.
OFF delay: ≤ 1.5 msec.
(When driving an inductive load, connect a diode in parallel with the load.)

TERMINAL ASSIGNMENTS

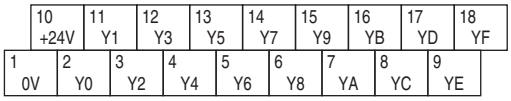

NO.	ID	FUNCTION	NO.	ID	FUNCTION
1	0 V	0 V (common)	10	+24 V	24 V DC
2	Y0	Output 0	11	Y1	Output 1
3	Y2	Output 2	12	Y3	Output 3
4	Y4	Output 4	13	Y5	Output 5
5	Y6	Output 6	14	Y7	Output 7
6	Y8	Output 8	15	Y9	Output 9
7	YA	Output 10	16	YB	Output 11
8	YC	Output 12	17	YD	Output 13
9	YE	Output 14	18	YF	Output 15

CIRCUIT DIAGRAM

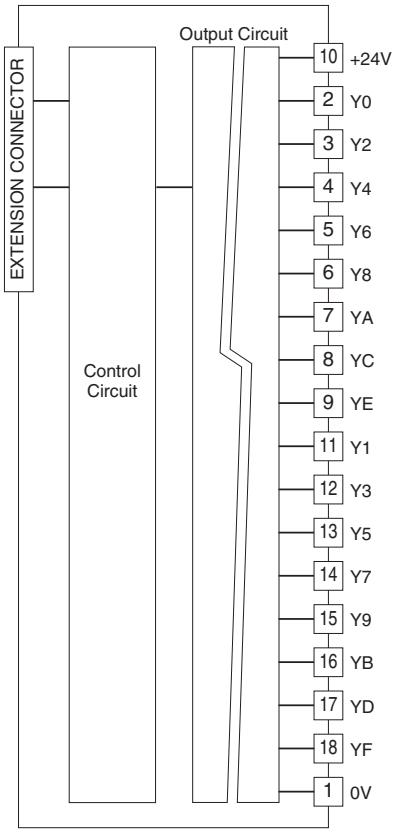

■ **Output Circuit**

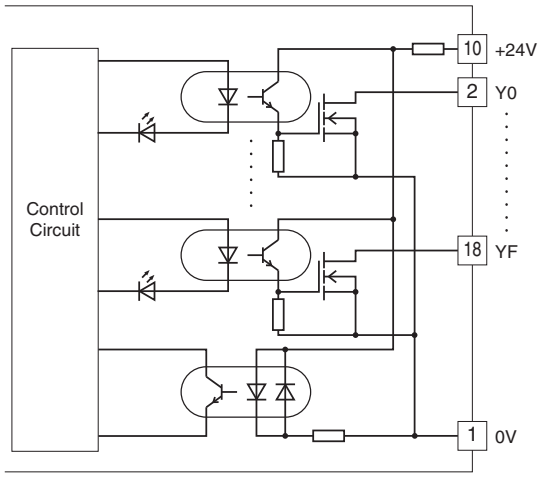

■ **Output Connection Example**

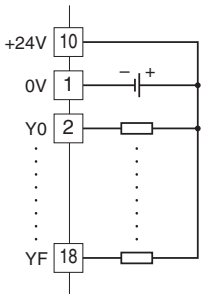

MG CO., LTD.
www.mgco.jp

PNP TRANSISTOR OUTPUT EXTENSION MODULE, 8 points

MODEL: R7E-EC8B

SPECIFICATIONS

Common: Positive common (PNP) per 8 points
Number of I/O: Output, 8 points
Maximum outputs applicable at once: No limit (at 24 V DC)
Output status indicator: LED turns ON with contact ON
Isolation: Output to internal circuits
Rated load voltage: 24 V DC ±10 %
Rated output current: 0.25 A per point, 2.0 A per common
Residual voltage: ≤ 1.2 V
Leakage current: ≤ 0.1 mA
ON delay: ≤ 0.5 msec.
OFF delay: ≤ 1.5 msec.
(When driving an inductive load, connect a diode in parallel with the load.)

TERMINAL ASSIGNMENTS

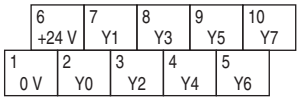

NO.	ID	FUNCTION	NO.	ID	FUNCTION
1	0 V	0 V	6	+24 V	24 V DC (common)
2	Y0	Output 0	7	Y1	Output 1
3	Y2	Output 2	8	Y3	Output 3
4	Y4	Output 4	9	Y5	Output 5
5	Y6	Output 6	10	Y7	Output 7

CIRCUIT DIAGRAM

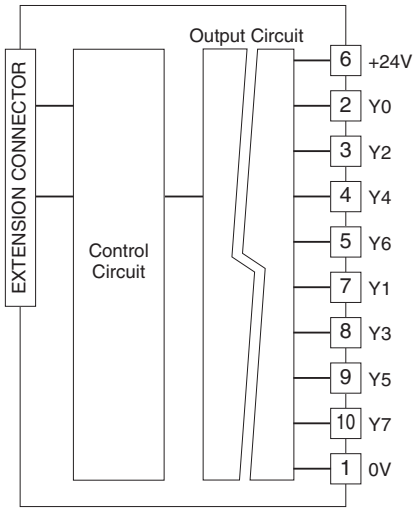

■ **Output Circuit**

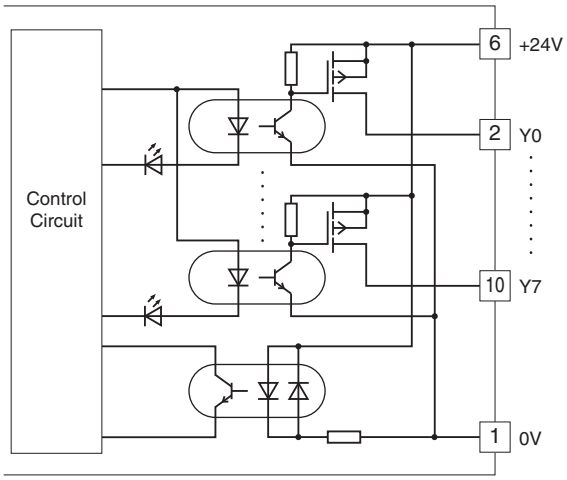

■ **Output Connection Example**

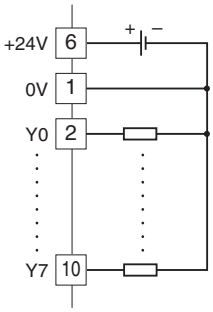

MG CO., LTD.
www.mgco.jp

PNP TRANSISTOR OUTPUT EXTENSION MODULE, 16 points

MODEL: R7E-EC16B

SPECIFICATIONS

Common: Positive common (PNP) per 16 points
Number of I/O: Output, 16 points
Maximum outputs applicable at once: No limit (at 24 V DC)
Output status indicator: LED turns ON with contact ON
Isolation: Output to internal circuits
Rated load voltage: 24 V DC ±10 %
Rated output current: 0.25 A per point, 2.0 A per common
Residual voltage: ≤ 1.2 V
Leakage current: ≤ 0.1 mA
ON delay: ≤ 0.5 msec.
OFF delay: ≤ 1.5 msec.
(When driving an inductive load, connect a diode in parallel with the load.)

TERMINAL ASSIGNMENTS

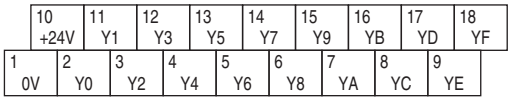

NO.	ID	FUNCTION	NO.	ID	FUNCTION
1	0 V	0 V	10	+24 V	24 V DC (common)
2	Y0	Output 0	11	Y1	Output 1
3	Y2	Output 2	12	Y3	Output 3
4	Y4	Output 4	13	Y5	Output 5
5	Y6	Output 6	14	Y7	Output 7
6	Y8	Output 8	15	Y9	Output 9
7	YA	Output 10	16	YB	Output 11
8	YC	Output 12	17	YD	Output 13
9	YE	Output 14	18	YF	Output 15

CIRCUIT DIAGRAM

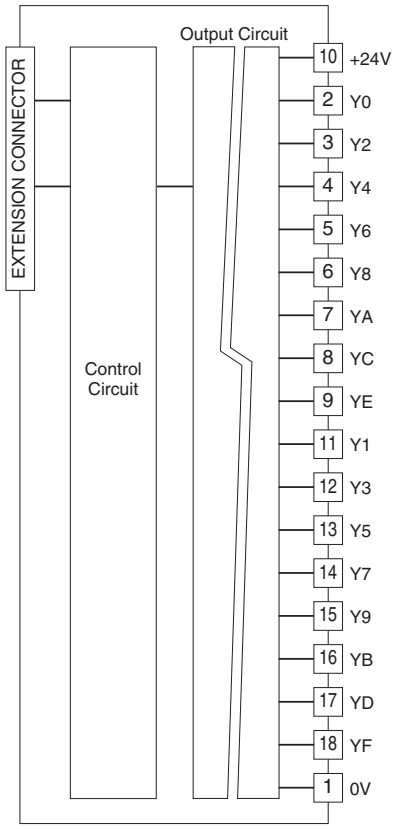

■ **Output Circuit**

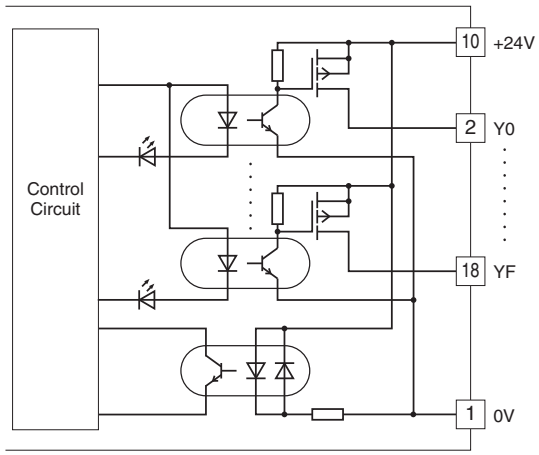

■ **Output Connection Example**

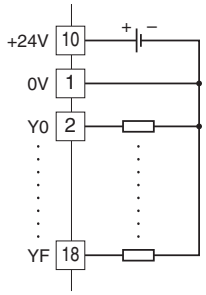

MG CO., LTD.
www.mgco.jp

⚠ Specifications are subject to change without notice.

MG CO., LTD.
www.mgco.jp