## Remote I/O R7 Series

## ETHERNET I/O MODULE

(Modbus/TCP)

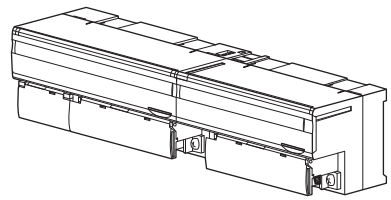

## ORDERING INFORMATION

• Basic module: R7E-[1]-R[2]
Specify a code from below for each of [1] and [2].
(e.g. R7E-DC16A-R/Q)
• Specify the specification for option code /Q
(e.g. /C01/SET)

• Extension module: R7E-[1][2]
Specify a code from below for each of [1] and [2].
(e.g. R7E-EC16B/Q)
• Specify the specification for option code /Q
(e.g. /C01)

## BASIC MODULE: R7E–[1]–R[2]

### [1] I/O TYPE

DA16: Discrete input, 16 points
DC16A: NPN transistor output, 16 points
DC16B: PNP transistor output, 16 points
SV4: DC voltage/current input (10 V/20 mA), 4 points
TS4: Thermocouple input, 4 points
RS4: RTD input, 4 points
MS4: Potentiometer input, 4 points
CT4E: AC current input, 4 points,
clamp-on current sensor CLSE use
PA8: Totalized pulse input, 8 points,
(CE not available)
YV2: DC voltage output, 2 points
YS2: DC current output, 2 points

### POWER INPUT

**DC Power**
R: 24 V DC
(Operational voltage range 24 V ±10 %, ripple 10 %p-p max.)

### [2] OPTIONS

blank: none
/Q: With options (specify the specification)

**SPECIFICATIONS OF OPTION: Q (multiple selections)**

**COATING (For the detail, refer to our web site.)**
/C01: Silicone coating
/C02: Polyurethane coating
/C03: Rubber coating
**EX-FACTORY SETTING**
/SET: Preset according to the Ordering Information Sheet (No. ESU-7807-x)

## EXTENSION MODULE: R7E–[1][2]

### [1] I/O TYPE

EA8: Discrete input, 8 points
EA16: Discrete input, 16 points
EC8A: NPN transistor output, 8 points
EC16A: NPN transistor output, 16 points
EC8B: PNP transistor output, 8 points
EC16B: PNP transistor output, 16 points

### [2] OPTIONS

blank: none
/Q: Option other than the above (specify the specification)

## SPECIFICATIONS OF OPTION: Q

**COATING (For the detail, refer to our web site.)**
/C01: Silicone coating
/C02: Polyurethane coating
/C03: Rubber coating

## FUNCTIONS & FEATURES

The R7E interfaces analog and discrete I/O signals with a PLC or PC via Ethernet Modbus/TCP nerwork.
A ‘basic’ module can be attached with an ‘extension’ module. By combining two modules, single station can handle mixed analog and discrete signals, 32-point discrete inputs, 32-point discrete outputs, 16-point discrete I/Os and other
combinations of signals.
Input sensor type (thermocouple, RTD) and range can be selected with the front DIP switches for all channels. In order to set different selections for individual channels, the PC Configurator Software (model: R7CON) is used.



MG CO., LTD.
www.mgco.jp

## RELATED PRODUCTS

• PC Configurator cable (model: MCN-CON or COP-US)
• PC configurator software (model: R7CON)
Downloadable at our web site.
• Clamp-on current sensor (model: CLSE)
For R7E-CT4E, the clamp-on current sensors must be ordered separately. Required number depends upon the channel number.

Note: PC Configurator Software is required to set IP address.

## GENERAL SPECIFICATIONS

■ Common Specifications
Power input: 24 V DC ±10 %; ripple 10 %p-p max.
Insulation resistance: ≥ 100 MΩ with 500 V DC
Dielectric strength: 1500 V AC @1 minute (between isolated circuits)
Operating temperature: -10 to +55°C (14 to 131°F)
Operating humidity: 30 to 90 %RH (non-condensing)
Atmosphere: No corrosive gas or heavy dust
Storage temperature: -20 to +65°C (-4 to +149°F)
Mounting: DIN rail (35 mm wide)
Connection
Ethernet: RJ-45 connector
Power & I/O: M3 separable screw terminals (torque 0.5 N·m)
Screw terminal material: Nickel-plated steel
Solderless terminal: Refer to the drawing at the end of the section.
Recommended manufacturer: Japan Solderless Terminal MFG.Co.Ltd, Nichifu Co.,ltd
Applicable wire size: 0.25 to 1.65 $mm^2$ (AWG22 to 16)
Housing material: Flame-resistant resin (gray)
Status indicator LEDs: PWR, RUN
Configurator connection: 2.5 dia. miniature jack (not available with extension module)

■ Current Consumption & Weight
R7E-DA16: Approx. 74 mA, 200 g (7.0 oz)
R7E-DC16A: Approx. 86 mA, 200 g (7.0 oz)
R7E-DC16B: Approx. 86 mA, 200 g (7.0 oz)
R7E-SV4: Approx. 97 mA, 200 g (7.0 oz)
R7E-TS4: Approx. 97 mA, 200 g (7.0 oz)
R7E-RS4: Approx. 97 mA, 200 g (7.0 oz)
R7E-MS4: Approx. 97 mA, 200 g (7.0 oz)
R7E-CT4E: Approx. 90 mA, 200 g (7.0 oz)
R7E-PA8: Approx. 80 mA, 200 g (7.0 oz)
R7E-YV2: Approx. 115 mA, 180 g (6.3 oz)
R7E-YS2: Approx. 161 mA, 180 g (6.3 oz)
R7E-EA8: Approx. 10 mA, 90 g (3.2 oz)
R7E-EA16: Approx. 20 mA, 150 g (5.3 oz)
R7E-EC8A: Approx. 10 mA, 90 g (3.2 oz)
R7E-EC16A: Approx. 20 mA, 150 g (5.3 oz)
R7E-EC8B: Approx. 10 mA, 90 g (3.2 oz)
R7E-EC16B: Approx. 20 mA, 150 g (5.3 oz)

■ **Recommended solderless terminal**

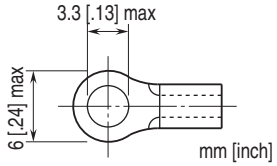


## ETHERNET COMMUNICATION

Physical layer standard: IEEE 802.3u
Data link layer: 10BASE-T / 100BASE-TX
Baud rate: 10 / 100 Mbps, Auto Negotiation
Protocol: Modbus/TCP
Data: RTU (binary)
Max. number of socket connections: Two (2)
Transmission media: 10BASE-T (STP cable, category 5)
100BASE-TX (STP cable, category 5e)
Max. segment length: 100 meters
IP address: Can be set and changed with PC Configurator Software (model: R7CON) (default: 192.168.0.1)
Subnet Mask: Can be set and changed with PC Configurator Software (model: R7CON) (default: 255.255.255.0)
Default Gateway: Can be set and changed with PC Configurator Software (model: R7CON) (Ver.2.41 or later: R7E-DA16 only) (default: 192.168.0.100)
Port No.: 502
Ethernet indicator LED: LINK, LINK100, COL

## STANDARDS & APPROVALS

EU conformity:
EMC Directive
EMI EN 61000-6-4
EMS EN 61000-6-2
RoHS Directive



MG CO., LTD.
www.mgco.jp

## EXTERNAL VIEW

### ■ BASIC MODULE

• **SIDE VIEW**

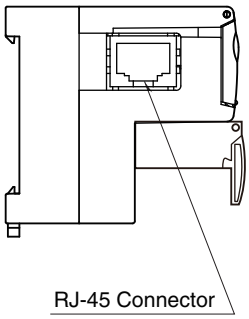


• **FRONT VIEW**

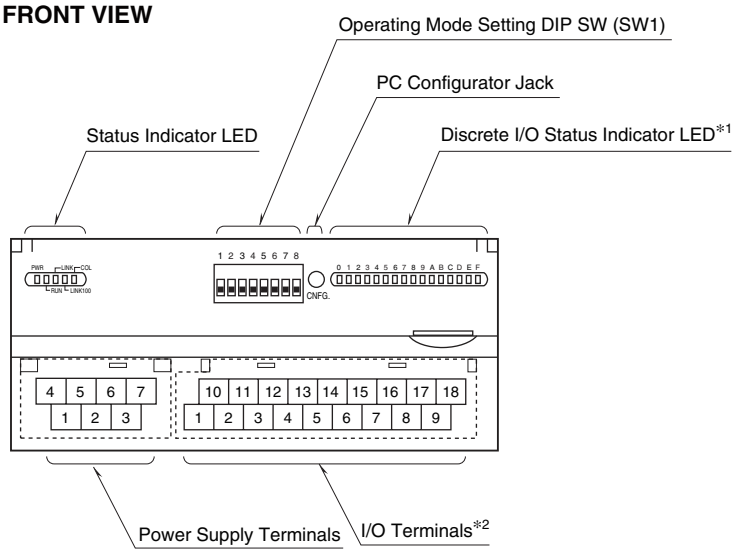


*1. Not available with analog I/O modules.
*2. 10 screw terminals for analog output modules.

### ■ EXTENSION MODULE

• **DISCRETE, 8 POINTS**

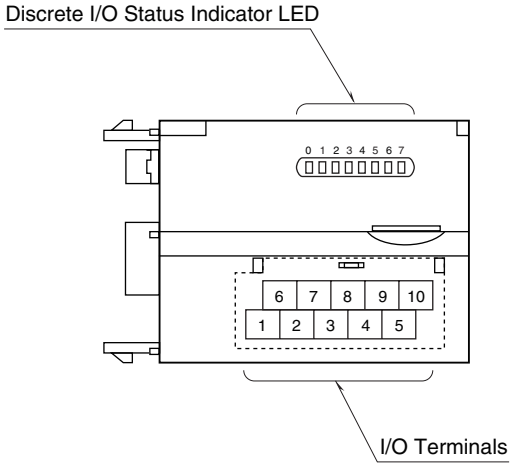

- **DISCRETE, 16 POINTS**

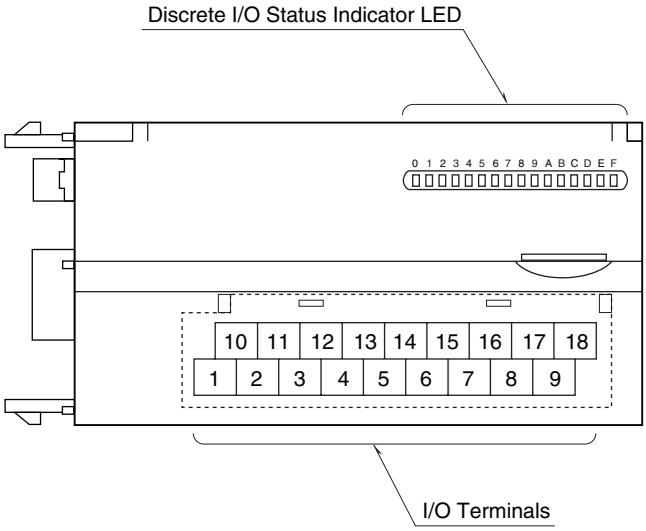


■ DISCRETE I/O & TOTALIZED PULSE INPUT STATUS INDICATOR LED

Discrete I/O modules, including those for extensions, have LED indicators showing I/O signal status.
Totalized pulse modules have LED indicators showing input signal status.
ON : LED ON
OFF : LED OF

## CONNECTION DIAGRAMS

■ **POWER SUPPLY TERMINAL ASSIGNMENT**

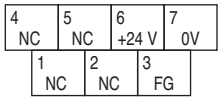


| NO. | ID | FUNCTION, NOTES |
|---|---|---|
| 1 | NC | ---- |
| 2 | NC | ---- |
| 3 | FG | FG |
| 4 | NC | ---- |
| 5 | NC | ---- |
| 6 | +24 V | Power input (24 V DC) |
| 7 | 0 V | Power input (0 V) |

## MODBUS FUNCTION CODES & SUPPORTED CODES

### ■ Data & Control Functions

| CODE | NAME | | |
|---|---|---|---|
| 01 | Read Coil Status | X | Digital output from the slave (read/write) |
| 02 | Read Input Status | X | Status of digital inputs to the slave (read only) |
| 03 | Read Holding Registers | X | General purpose register within the slave (read/write) |
| 04 | Read Input Registers | X | Collected data from the field by the slave (read only) |
| 05 | Force Single Coil | X | Digital output from the slave (read/write) |
| 06 | Preset Single Register | X | General purpose register within the slave (read/write) |
| 07 | Read Exception Status | | |
| 08 | Diagnostics | X | |
| 09 | Program 484 | | |
| 10 | Poll 484 | | |
| 11 | Fetch Comm. Event Counter | X | Fetch a status word and an event counter |
| 12 | Fetch Comm. Event Log | X | A status word, an event counter, a message count and a field of event bytes |
| 13 | Program Controller | | |
| 14 | Poll Controller | | |
| 15 | Force Multiple Coils | X | Digital output from the slave (read/write) |
| 16 | Preset Multiple Registers | X | General purpose register within the slave (read/write) |
| 17 | Report Slave ID | X | Slave type / 'RUN' status |
| 18 | Program 884/M84 | | |
| 19 | Reset Comm. Link | | |
| 20 | Read General Reference | | |
| 21 | Write General Reference | | |
| 22 | Mask Write 4X Register | | |
| 23 | Read/Write 4X Register | | |
| 24 | Read FIFO Queue | | |

### ■ Exception Code

| CODE | NAME | | |
|---|---|---|---|
| 01 | Illegal Function | X | Function code is not allowable for the slave |
| 02 | Illegal Data Address | X | Address is not available within the slave |
| 03 | Illegal Data Value | X | Data is not valid for the function |
| 04 | Slave Device Failure | | |
| 05 | Acknowledge | | |
| 06 | Slave Device Busy | | |
| 07 | Negative Acknowledge | | |
| 08 | Memory Parity Error | | |

### ■ Diagnostic Subfunctions

| CODE | NAME | | |
|---|---|---|---|
| 00 | Return Query Data | X | Loop back test |
| 01 | Restart Comm. Option | | |
| 02 | Return Diagnostic Register | | |
| 03 | Change Input Delimiter Character | | |
| 04 | Force Slave to Listen Only Mode | | |

## MODBUS I/O ASSIGNMENT

| | ADDRESS | DATA TYPE | DATA |
|---|---|---|---|
| Coil (0X) | 1 – 16 | | Digital Output (discrete output of the basic module) |
| | 17 – 32 | | Digital Output (discrete output of the extension module) |
| Inputs (1X) | 1 – 16 | | Digital Input (discrete input of the basic module) |
| | 17 – 32 | | Digital Input (discrete input of the extension module) |
| | 33 – 48 | | Reserved (unused) |
| | 49 – 64 | | Module Status |
| | 65 – 80 | | Reserved (unused) |
| Input Registers (3X) | 1 – 4 | I | Analog Input |
| | 5 – 16 | ---- | Reserved (unused) |
| | 17 – 24 | F | Analog Input |
| | 25 – 48 | ---- | Reserved (unused) |
| Holding Registers (4X) | 1 – 2 | I | Analog Output |
| | 3 – 16 | ---- | Reserved (unused) |
| | 17 – 20 | F | Analog Output |
| | 21 – 48 | ---- | Reserved (unused) |

I : Integer, -1500 – +11500 (-15 – +115%)
F : Floating
Note: DO NOT access addresses other than mentioned above. Such access may cause problems such as inadequate operation.

### ■ STATUS

Analog input modules (models: R7E-SV4, R7E-TS4, R7E-RS4, R7E-MS4, R7E-CT4E) can show input status of each channel. Analog output modules (models: R7E-YS2, R7E-YV2), discrete I/O modules (models: R7E-DA16, R7E-DC16A, R7E-DC16B) and totalized pulse input (model: R7E-PA8) show ‘0’ at the same address.

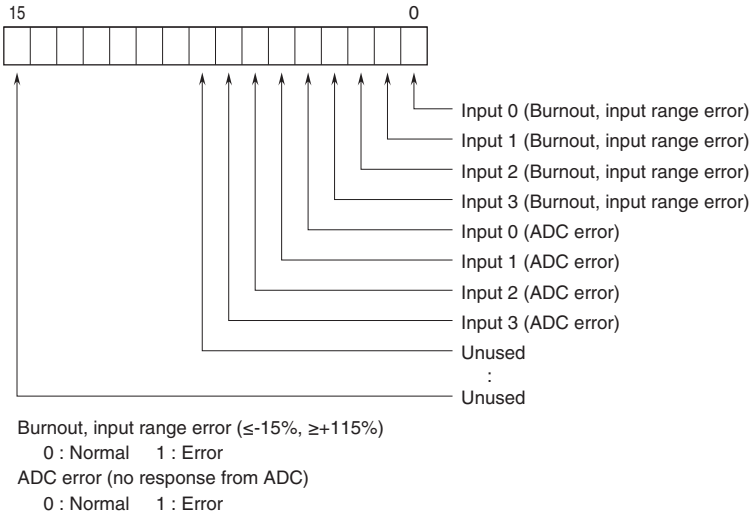

## DATA CONVERSION

### ■ 0 – 100% DATA CONVERSION

Analog input data is converted into digital representations of 0 – 100% proportional to each scaled range. The converted % values are multiplied by 100 and expressed in 16 bits.
Overrange input is possible from -15 to +115% of the nominal range. When the signal exceeds the limit, the data is fixed at -15% or +115% respectively. Negative value is represented in 2's complements.

• Input Range 0 – 5 V DC

| Input Value | Input % | Converted Data, Decimal | Converted Data, Hex |
|---|---|---|---|
| ≤ -0.75 V | -15% | -1500 | FA24 |
| 0 V | 0% | 0 | 0 |
| 5 V | 100% | 10000 | 2710 |
| ≥ 5.75 V | 115% | 11500 | 2CEC |

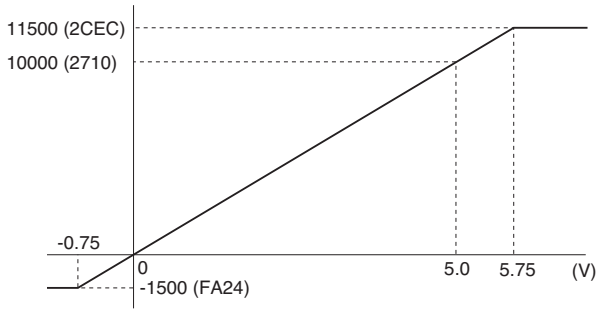


Analog output is converted in the reverse order of the input data. The output range 0 – 5 V DC is expressed as 10000 at 5.0 V (100%) and 0 at 0 V (0%).

### ■ ENGINEERING UNIT CONVERSION

Engineering unit value °C or K is multiplied by 10 and expressed in 16 bits. °F data is represented in engineering unit value, without multiplication. Engineering unit value A is multiplied by 100 or 1000, expressed in 16 bits. Negative value is represented in 2's complements.

• Input TYPE K Thermocouple

| Input Value | Converted Data, Decimal | Converted Data, Hex |
|---|---|---|
| ≤ -272°C | -2720 | F560 |
| -150°C | -1500 | FA24 |
| 1370°C | 13700 | 3584 |
| ≥ 1472°C | 14720 | 3980 |

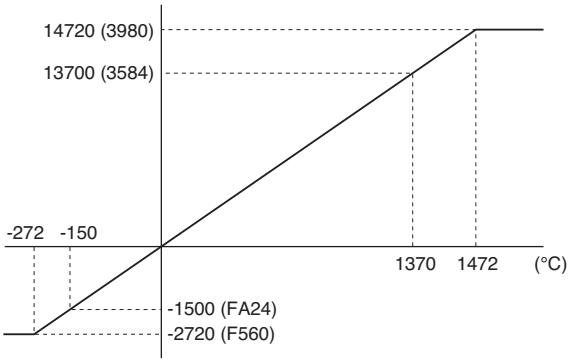


### ■ COUNT VALUE

The count value is 32-bit data. It is divided in 2 words of 16 bits represented with 2 addresses.The lower address is allocated in the upper word (MSB) and the upper address in the lower word (LSB). The count value is 0 - 4 294 967 295. The maximum count value available is 1 000 - 4 294 967 295. In case of overflow, the vaule is reset to 0 or 1 (configurable) from which the count will restart. The preset of the count value is also available. Use the R7CON or host PC/PLC for the configuration.

## EXTENSION MODULE

A ‘basic’ module can be attached with one ‘extension’ module. The extension module is powered from the basic module. By combining two modules, single station can handle mixed analog and discrete signals, 32-point discrete inputs, 32-point discrete outputs, 16-point discrete I/Os and other combinations of signals.

### ■ OUTPUT AT THE LOSS OF COMMUNICATION

The extension module is set to ‘Hold Output’ by factory default setting. The PC Configurator software is used to change the setting to ‘Reset Output.’

### ■ CONNECTING THE EXTENSION MODULE

1) Remove the extension connector cover located at the side of the basic module.
2) Connect the extension module.

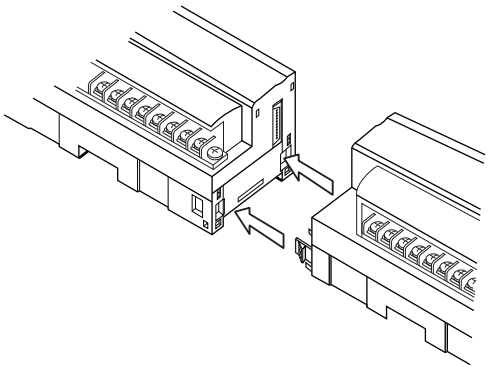

3) Mount the combined module on a DIN rail.

## EXTERNAL DIMENSIONS & TERMINAL ASSIGNMENTS unit: mm [inch]

### ■ BASIC MODULE

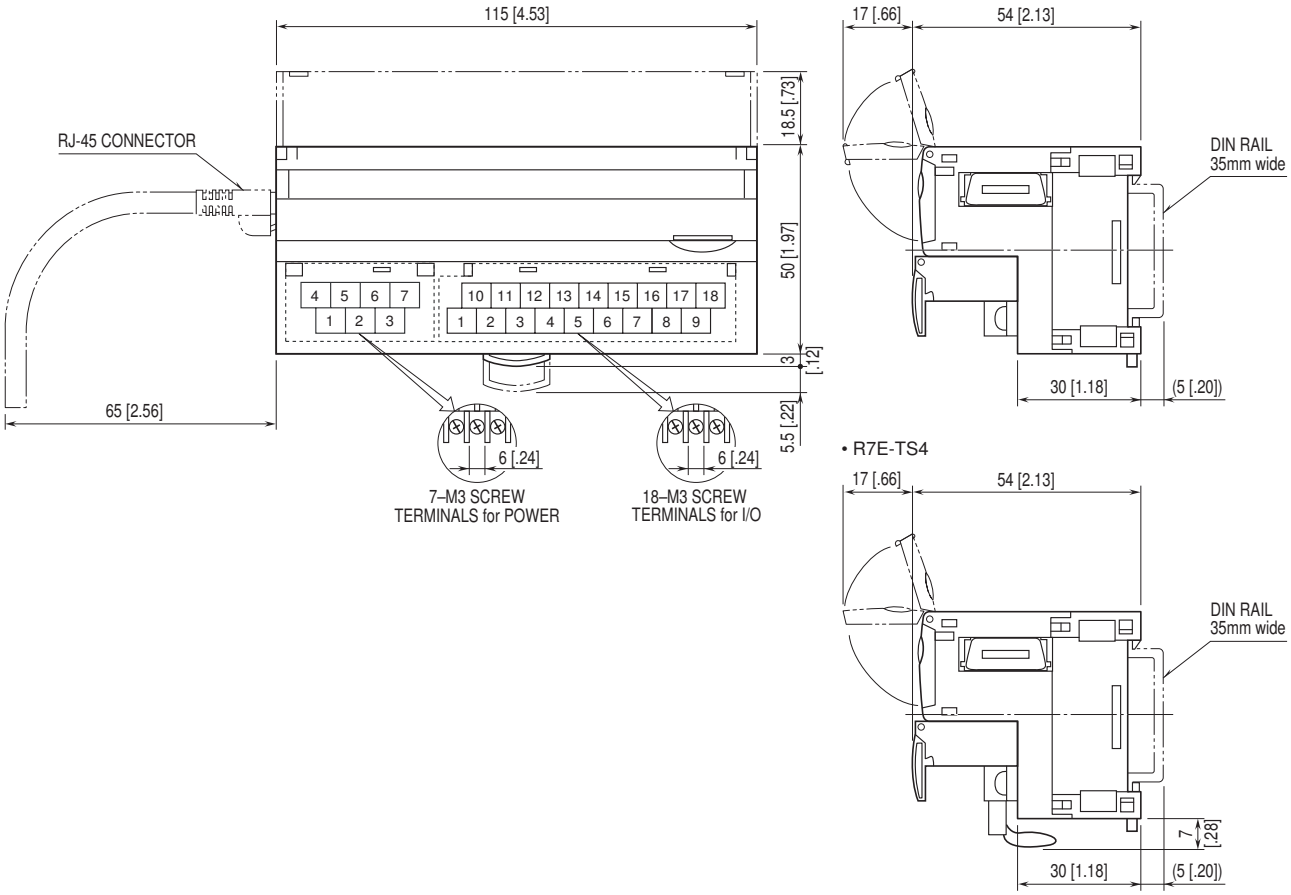




MG CO., LTD.
www.mgco.jp

## ■ BASIC MODULE, ANALOG OUTPUT

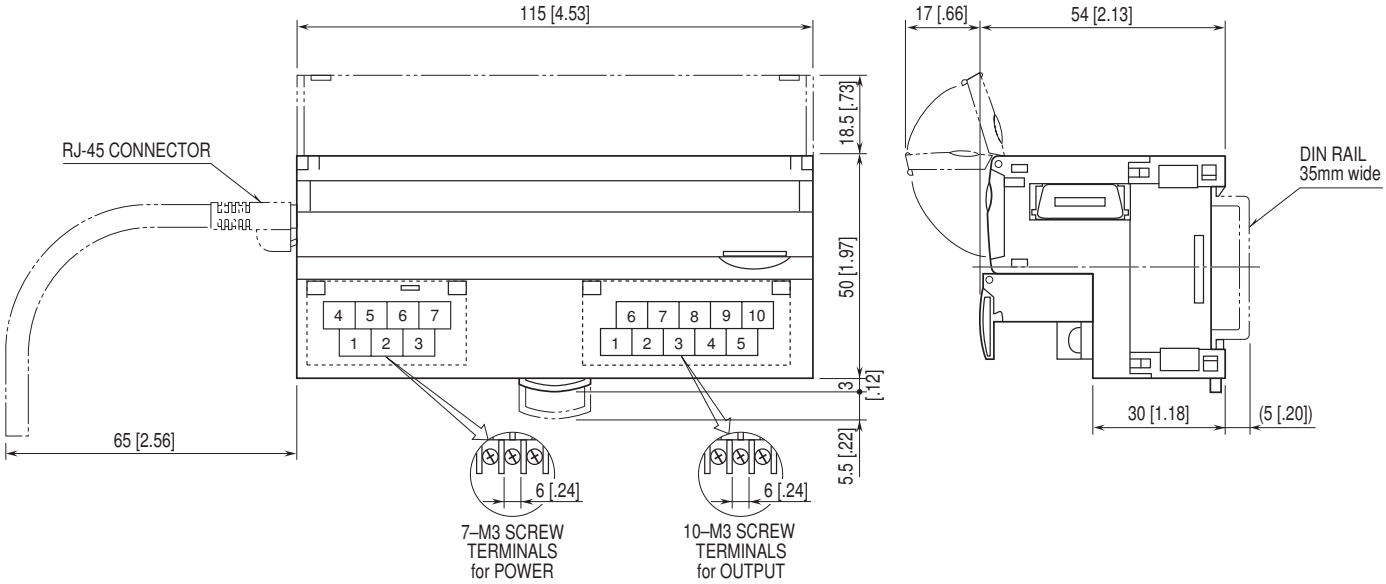


## ■ EXTENSION MODULE, 8 POINTS

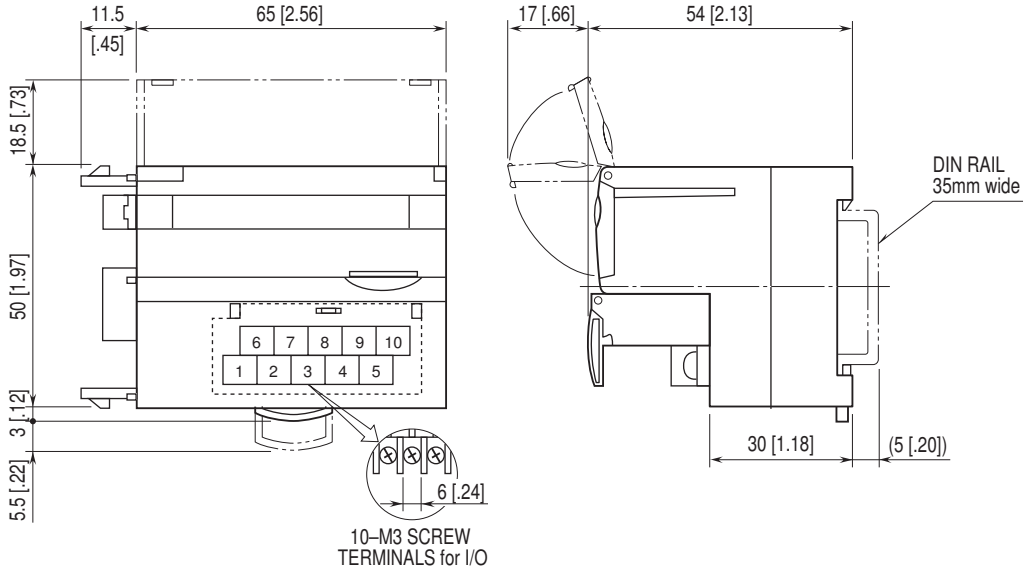


## ■ EXTENSION MODULE, 16 POINTS

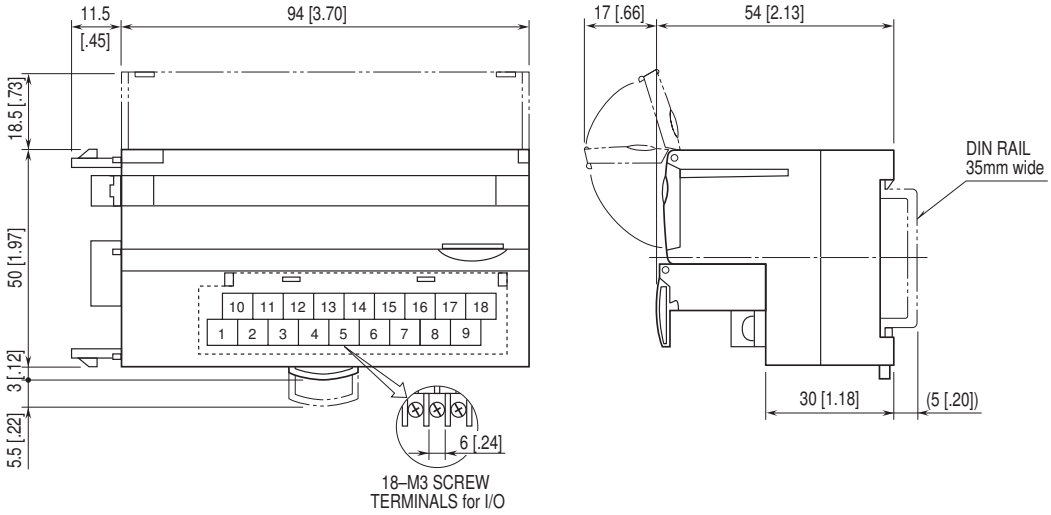




MG CO., LTD.
www.mgco.jp

## DISCRETE INPUT MODULE, 16 points

## MODEL: R7E-DA16

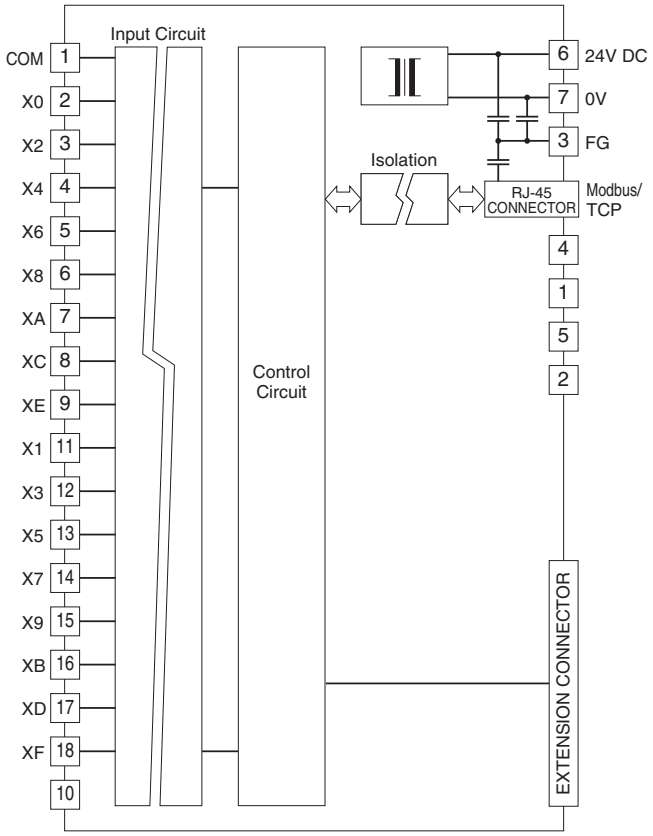


## SPECIFICATIONS

**Common**: Positive or negative common (NPN/PNP) per 16 points
**Number of I/O**: Input, 16 points
**Maximum inputs applicable at once**: No limit (at 24 V DC)
**Input status indicator**: LED turns ON with contact ON
**Isolation**: Input to Ethernet to FG to power input
**Rated input voltage**: 24 V DC ±10 %; ripple 5 %p-p max.
**ON voltage / current**: ≥ 15 V DC (input – COM) / ≥ 3.5 mA
**OFF voltage / current**: ≤ 5 V DC (input – COM) / ≤ 1 mA
**Input current**: ≤ 5.5 mA per point at 24 V DC
**Input resistance**: Approx. 4.4 kΩ
**ON delay**: ≤ 2.0 msec.
**OFF delay**: ≤ 2.0 msec.

## OPERATING MODE SETTING

(*) Factory setting
Note: Be sure to set unused SW1-3 through 1-8 to OFF.

**• Extension (SW1-1, 1-2)**

| SW1-1 | SW1-2 | Extension |
|---|---|---|
| OFF | OFF | No extension (*) |
| ON | OFF | Discrete input, 8 or 16 points |
| OFF | ON | Discrete output, 8 or 16 points |

## TERMINAL ASSIGNMENTS

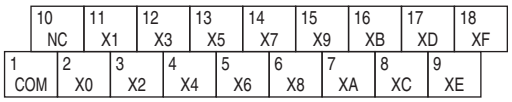


| NO. | ID | FUNCTION | NO. | ID | FUNCTION |
|---|---|---|---|---|---|
| 1 | COM | Common | 10 | NC | No Connection |
| 2 | X0 | Input 0 | 11 | X1 | Input 1 |
| 3 | X2 | Input 2 | 12 | X3 | Input 3 |
| 4 | X4 | Input 4 | 13 | X5 | Input 5 |
| 5 | X6 | Input 6 | 14 | X7 | Input 7 |
| 6 | X8 | Input 8 | 15 | X9 | Input 9 |
| 7 | XA | Input 10 | 16 | XB | Input 11 |
| 8 | XC | Input 12 | 17 | XD | Input 13 |
| 9 | XE | Input 14 | 18 | XF | Input 15 |

## CIRCUIT DIAGRAM

Note: In order to improve EMC performance, bond the FG terminal to ground.
Caution: FG terminal is NOT a protective conductor terminal.

■ **Input Circuit**

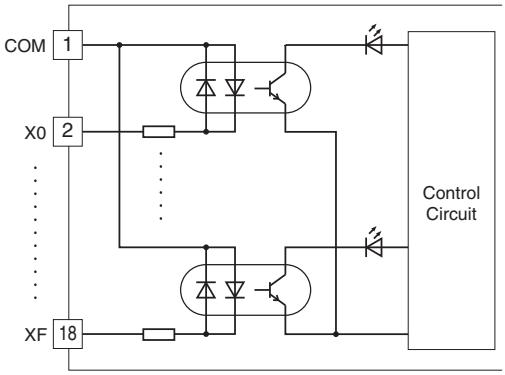


■ **Input Connection Examples**

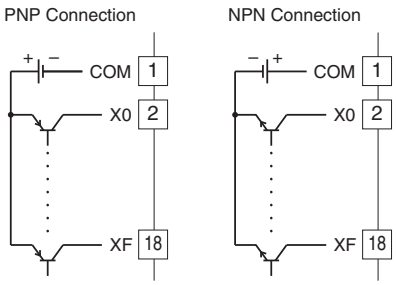




MG CO., LTD.
www.mgco.jp

**NPN TRANSISTOR OUTPUT MODULE, 16 points**

## MODEL: R7E-DC16A

## SPECIFICATIONS

**Common**: Negative common (NPN) per 16 points
**Number of I/O**: Output, 16 points
**Maximum outputs applicable at once**: No limit (at 24 V DC)
**Output status indicator**: LED turns ON with contact ON
**Isolation**: Output to Ethernet to FG to power input
**Rated load voltage**: 24 V DC ±10 %
**Rated output current**: 0.25 A per point, 2.0 A per common
**Residual voltage**: ≤ 1.2 V
**Leakage current**: ≤ 0.1 mA
**ON delay**: ≤ 0.5 msec.
**OFF delay**: ≤ 1.5 msec.
(When driving an inductive load, connect a diode in parallel with the load.)

## OPERATING MODE SETTING

(*) Factory setting
Note: Be sure to set unused SW1-3 and 1-5 through 1-8 to OFF.

**• Output at the Loss of Communication (SW1-4)**

| SW1-4 | Output at the loss of communication |
|---|---|
| OFF | Reset the output (turned off) |
| ON | Hold the output (*)<br>(maintains the last data received normally) |

**• Extension (SW1-1, 1-2)**

| SW1-1 | SW1-2 | Extension |
|---|---|---|
| OFF | OFF | No extension (*) |
| ON | OFF | Discrete input, 8 or 16 points |
| OFF | ON | Discrete output, 8 or 16 points |

## TERMINAL ASSIGNMENTS

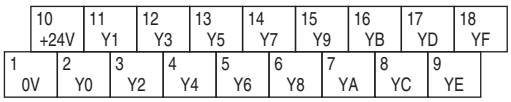


| NO. | ID | FUNCTION | NO. | ID | FUNCTION |
|---|---|---|---|---|---|
| 1 | 0 V | 0 V (common) | 10 | +24 V | 24 V DC |
| 2 | Y0 | Output 0 | 11 | Y1 | Output 1 |
| 3 | Y2 | Output 2 | 12 | Y3 | Output 3 |
| 4 | Y4 | Output 4 | 13 | Y5 | Output 5 |
| 5 | Y6 | Output 6 | 14 | Y7 | Output 7 |
| 6 | Y8 | Output 8 | 15 | Y9 | Output 9 |
| 7 | YA | Output 10 | 16 | YB | Output 11 |
| 8 | YC | Output 12 | 17 | YD | Output 13 |
| 9 | YE | Output 14 | 18 | YF | Output 15 |

## CIRCUIT DIAGRAM

Note: In order to improve EMC performance, bond the FG terminal to ground.
Caution: FG terminal is NOT a protective conductor terminal.

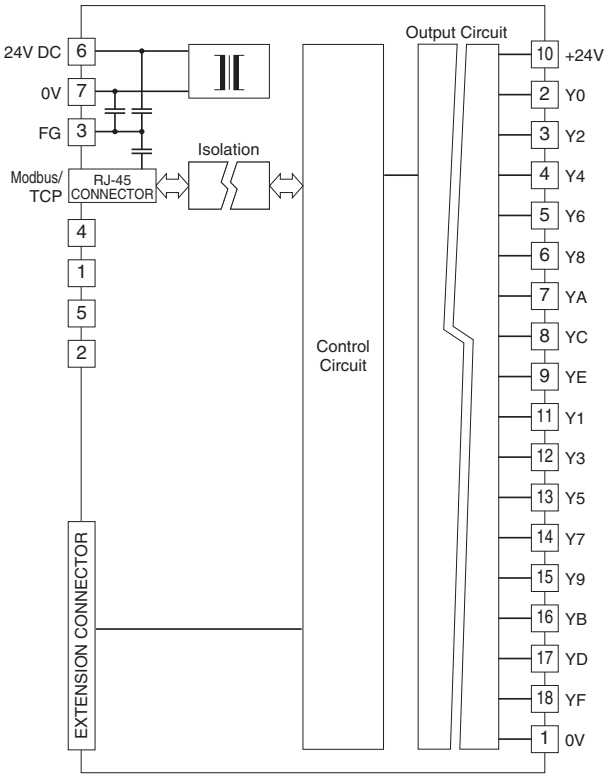


■ Output Circuit

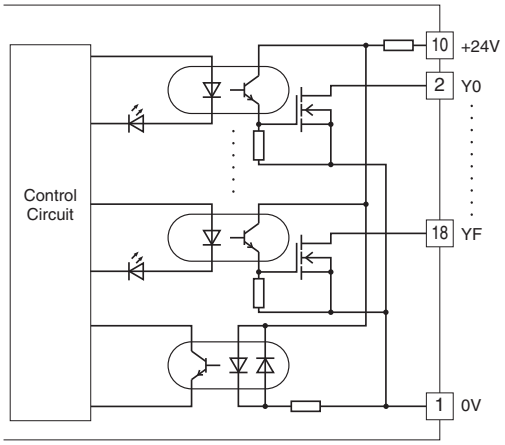


■ Output Connection Example

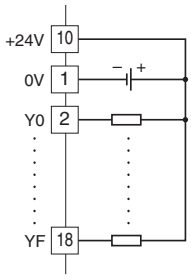




MG CO., LTD.
www.mgco.jp

**PNP TRANSISTOR OUTPUT MODULE, 16 points**

## MODEL: R7E-DC16B

## SPECIFICATIONS

**Common**: Positive common (PNP) per 16 points
**Number of I/O**: Output, 16 points
**Maximum outputs applicable at once**: No limit (at 24 V DC)
**Output status indicator**: LED turns ON with contact ON
**Isolation**: Output to Ethernet to FG to power input
**Rated load voltage**: 24 V DC ±10 %
**Rated output current**: 0.25 A per point, 2.0 A per common
**Residual voltage**: ≤ 1.2 V
**Leakage current**: ≤ 0.1 mA
**ON delay**: ≤ 0.5 msec.
**OFF delay**: ≤ 1.5 msec.
(When driving an inductive load, connect a diode in parallel with the load.)

## OPERATING MODE SETTING

(*) Factory setting
Note: Be sure to set unused SW1-3 and 1-5 through 1-8 to OFF.

**• Output at the Loss of Communication (SW1-4)**

| SW1-4 | Output at the loss of communication |
|---|---|
| OFF | Reset the output (turned off) |
| ON | Hold the output (*)<br>(maintains the last data received normally) |

**• Extension (SW1-1, 1-2)**

| SW1-1 | SW1-2 | Extension |
|---|---|---|
| OFF | OFF | No extension (*) |
| ON | OFF | Discrete input, 8 or 16 points |
| OFF | ON | Discrete output, 8 or 16 points |

## TERMINAL ASSIGNMENTS

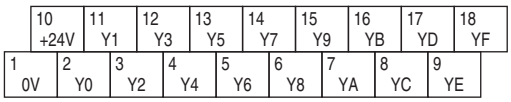


| NO. | ID | FUNCTION | NO. | ID | FUNCTION |
|---|---|---|---|---|---|
| 1 | 0 V | 0 V | 10 | +24 V | 24 V DC (common) |
| 2 | Y0 | Output 0 | 11 | Y1 | Output 1 |
| 3 | Y2 | Output 2 | 12 | Y3 | Output 3 |
| 4 | Y4 | Output 4 | 13 | Y5 | Output 5 |
| 5 | Y6 | Output 6 | 14 | Y7 | Output 7 |
| 6 | Y8 | Output 8 | 15 | Y9 | Output 9 |
| 7 | YA | Output 10 | 16 | YB | Output 11 |
| 8 | YC | Output 12 | 17 | YD | Output 13 |
| 9 | YE | Output 14 | 18 | YF | Output 15 |

## CIRCUIT DIAGRAM

Note: In order to improve EMC performance, bond the FG terminal to ground.
Caution: FG terminal is NOT a protective conductor terminal.

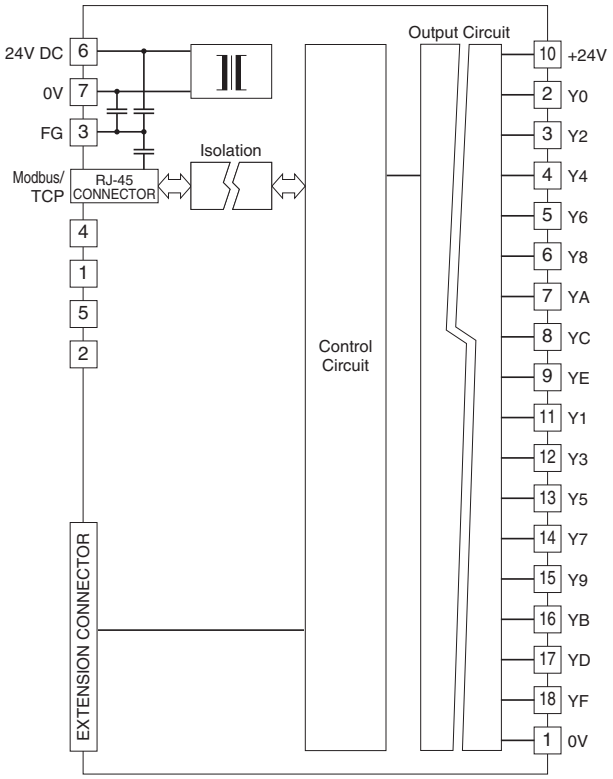


■ Output Circuit

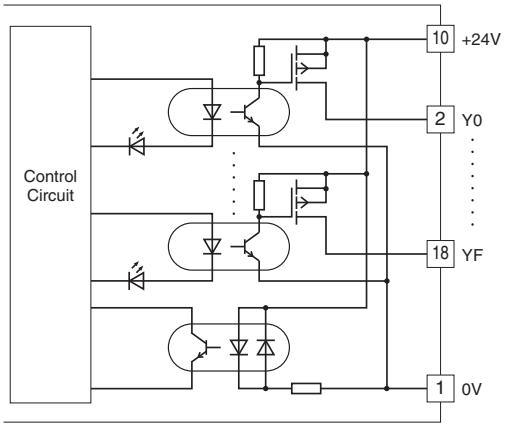


■ Output Connection Example

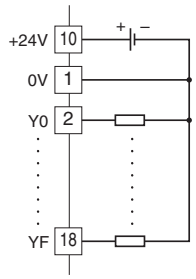




MG CO., LTD.
www.mgco.jp

**DC VOLTAGE/CURRENT INPUT MODULE, 4 points**

## MODEL: R7E-SV4

## SPECIFICATIONS

Isolation: Input 0 to input 1 to input 2 to input 3 to Ethernet to FG to power input

Converted data range: 0 – 10000 of the input range

• Input range

Wide span voltage: -10 – +10 V DC, -5 – +5 V DC, 0 – 10 V DC, 0 – 5 V DC, 1 – 5 V DC

Narrow span voltage: -1 – +1 V DC, 0 – 1 V DC, -0.5 – +0.5 V DC

Current range: -20 – +20 mA DC, 0 – 20 mA DC, 4 – 20 mA DC

• Input resistance

Wide span voltage: ≥ 1 MΩ

Narrow span voltage: ≥ 100 kΩ

Current range: 70 Ω

Conversion rate / conversion accuracy: 10 msec./±0.8 %, 20 msec./±0.4 %, 40 msec./±0.2 %, 80 msec./±0.1 %

Response time: Conversion rate × 2 + 50 msec. (0 – 90 %)

Temperature coefficient: ±0.015 %/°C (±0.008 %/°F)

## OPERATING MODE SETTING

(*) Factory setting

**• Input Range (SW1-5, 1-6, 1-7, 1-8)**

| SW1-5 | SW1-6 | SW1-7 | SW1-8 | Input range |
|---|---|---|---|---|
| OFF | OFF | OFF | OFF | -10 – +10 V DC (*) |
| ON | OFF | OFF | OFF | -5 – +5 V DC |
| OFF | ON | OFF | OFF | -1 – +1 V DC |
| ON | ON | OFF | OFF | 0 – 10 V DC |
| OFF | OFF | ON | OFF | 0 – 5 V DC |
| ON | OFF | ON | OFF | 1 – 5 V DC |
| OFF | ON | ON | OFF | 0 – 1V DC |
| ON | ON | ON | OFF | -0.5 – +0.5 V DC |
| ON | OFF | OFF | ON | -20 – +20 mA DC |
| OFF | ON | OFF | ON | 4 – 20 mA DC |
| ON | ON | OFF | ON | 0 – 20 mA DC |
| ON | ON | ON | ON | PC Configurator setting |

**• Conversion Rate / Accuracy (SW1-3, 1-4)**

| SW1-3 | SW1-4 | Conversion rate / Accuracy |
|---|---|---|
| OFF | OFF | 80 msec. / ±0.1% (*) |
| ON | OFF | 40 msec. / ±0.2% |
| OFF | ON | 20 msec. / ±0.4% |
| ON | ON | 10 msec. / ±0.8% |

**• Extension (SW1-1, 1-2)**

| SW1-1 | SW1-2 | Extension |
|---|---|---|
| OFF | OFF | No extension (*) |
| ON | OFF | Discrete input, 8 or 16 points |
| OFF | ON | Discrete output, 8 or 16 points |

## TERMINAL ASSIGNMENTS

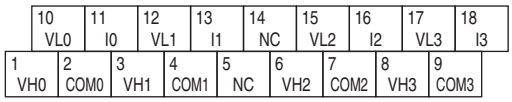


| NO. | ID | FUNCTION | NO. | ID | FUNCTION |
|---|---|---|---|---|---|
| 1 | VH0 | Wide span volt. 0 | 10 | VL0 | Narrow span volt. 0 |
| 2 | COM0 | Common 0 | 11 | I0 | Current range 0 |
| 3 | VH1 | Wide span volt. 1 | 12 | VL1 | Narrow span volt. 1 |
| 4 | COM1 | Common 1 | 13 | I1 | Current range 1 |
| 5 | NC | No connection | 14 | NC | No connection |
| 6 | VH2 | Wide span volt. 2 | 15 | VL2 | Narrow span volt. 2 |
| 7 | COM2 | Common 2 | 16 | I2 | Current range 2 |
| 8 | VH3 | Wide span volt. 3 | 17 | VL3 | Narrow span volt. 3 |
| 9 | COM3 | Common 3 | 18 | I3 | Current range 3 |

## CIRCUIT DIAGRAM

Note: In order to improve EMC performance, bond the FG terminal to ground.

Caution: FG terminal is NOT a protective conductor terminal.

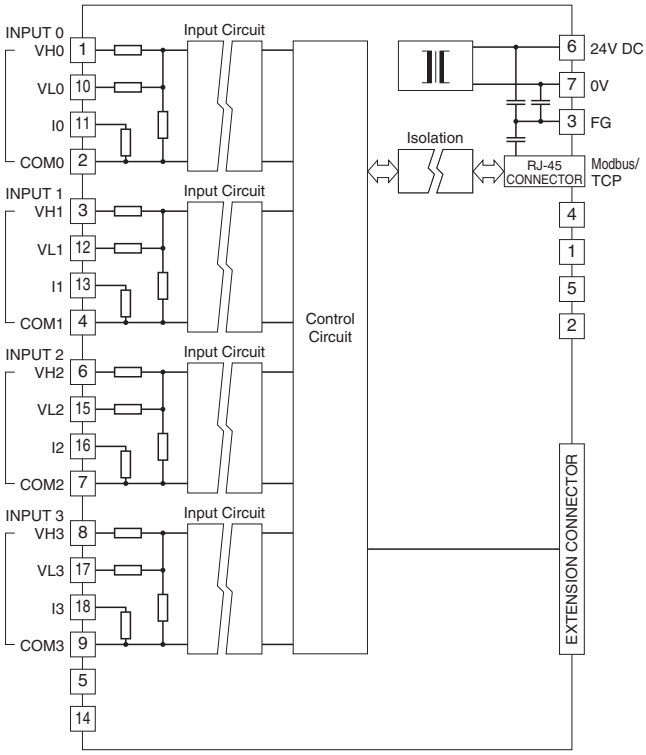


■ Input Connection Examples

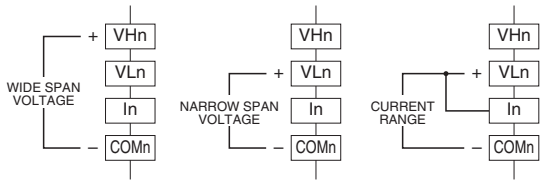


Be sure to close across VLn and In terminals for a current input.



MG CO., LTD.
www.mgco.jp

## THERMOCOUPLE INPUT MODULE, 4 points

## MODEL: R7E-TS4

## SPECIFICATIONS

**Isolation**: Input 0 to input 1 to input 2 to input 3 to Ethernet to FG to power input
**Converted data range**: Engineering unit value (°C, K) × 10 (integer); No multiplication for °F
**Linearization**: Standard
**Thermocouple**: K, E, J, T, B, R, S, C, N, U, L, P, PR
**Cold junction compensation**: CJC sensor attached to the input terminals
**Input resistance**: ≥ 30 kΩ
**Burnout sensing**: ≤ 0.1 μA
**Conversion accuracy**: ±1°C (±1.8°F);
±2.0°C (±3.6°F) for B, R, S, C, PR
**Conversion rate**: 250 msec. or 1 sec.
**Response time**: Conversion rate × 2 + 50 msec. (0 – 90 %)
**Temperature coefficient**: ±0.015 %/°C (±0.008 %/°F) of max. span
**CJC error**: ±1.0°C at 25°C ±10°C
(±1.8°F at 77°F ±18°F)
±1.5°C (±2.7°F) for R, S, PR

| T/C | BURNOUT INDICATION (°C) | | CONFORMANCE RANGE (°C) |
|---|---|---|---|
| | Downscale | Upscale | |
| K (CA) | -272 | +1472 | -150 to +1370 |
| E (CRC) | -272 | +1120 | -170 to +1000 |
| J (IC) | -260 | +1300 | -180 to +1200 |
| T (CC) | -272 | + 500 | -170 to + 400 |
| B (RH) | 24 | 1920 | 1000 to 1760 |
| R | -100 | +1860 | 380 to 1760 |
| S | -100 | +1860 | 400 to 1760 |
| C (WRe 5-26) | -52 | +2416 | 100 to 2315 |
| N | -272 | +1400 | -130 to +1300 |
| U | -252 | + 700 | -200 to +600 |
| L | -252 | +1000 | -200 to +900 |
| P (Platinel II) | -52 | +1496 | 0 to 1395 |
| (PR) | -52 | +1860 | 300 to 1760 |

| T/C | BURNOUT INDICATION (°F) | | CONFORMANCE RANGE (°F) |
|---|---|---|---|
| | Downscale | Upscale | |
| K (CA) | -458 | +2682 | -238 to +2498 |
| E (CRC) | -458 | +2048 | -274 to +1832 |
| J (IC) | -436 | +2372 | -292 to +2192 |
| T (CC) | -458 | +932 | -274 to +752 |
| B (RH) | 75 | 3488 | 1832 to 3200 |
| R | -148 | +3380 | 716 to 3200 |
| S | -148 | +3380 | 752 to 3200 |
| C (WRe 5-26) | -62 | +4381 | 212 to 4199 |
| N | -458 | +2552 | -202 to +2372 |
| U | -422 | +1292 | -328 to +1112 |
| L | -422 | +1832 | -328 to +1652 |
| P (Platinel II) | -62 | +2725 | 32 to 2543 |
| (PR) | -62 | +3380 | 572 to 3200 |

## OPERATING MODE SETTING

(*) Factory setting

**• Thermocouple Type (SW1-5, 1-6, 1-7, 1-8)**

| SW1-5 | SW1-6 | SW1-7 | SW1-8 | Thermocouple type |
|---|---|---|---|---|
| OFF | OFF | OFF | OFF | K (CA) (*) |
| ON | OFF | OFF | OFF | E (CRC) |
| OFF | ON | OFF | OFF | J (IC) |
| ON | ON | OFF | OFF | T (CC) |
| OFF | OFF | ON | OFF | B (RH) |
| ON | OFF | ON | OFF | R |
| OFF | ON | ON | OFF | S |
| ON | ON | ON | OFF | C (WRe 5-26) |
| OFF | OFF | OFF | ON | N |
| ON | OFF | OFF | ON | U |
| OFF | ON | OFF | ON | L |
| ON | ON | OFF | ON | P (Platinel II) |
| OFF | OFF | ON | ON | (PR) |
| ON | ON | ON | ON | PC Configurator setting |

**• Conversion Rate (SW1-3)**

| SW1-3 | Conversion rate |
|---|---|
| OFF | 250 msec. (*) |
| ON | 1 sec. |

**• Burnout (SW1-4)**

| SW1-4 | Burnout |
|---|---|
| OFF | Upscale (*) |
| ON | Downscale |

**• Extension (SW1-1, 1-2)**

| SW1-1 | SW1-2 | Extension |
|---|---|---|
| OFF | OFF | No extension (*) |
| ON | OFF | Discrete input, 8 or 16 points |
| OFF | ON | Discrete output, 8 or 16 points |

## TERMINAL ASSIGNMENTS

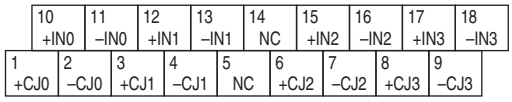


| NO. | ID | FUNCTION | NO. | ID | FUNCTION |
|---|---|---|---|---|---|
| 1 | +CJ0 | CJC + 0 | 10 | +IN0 | T/C + 0 |
| 2 | –CJ0 | CJC – 0 | 11 | –IN0 | T/C – 0 |
| 3 | +CJ1 | CJC + 1 | 12 | +IN1 | T/C + 1 |
| 4 | –CJ1 | CJC – 1 | 13 | –IN1 | T/C – 1 |
| 5 | NC | No connection | 14 | NC | No connection |
| 6 | +CJ2 | CJC + 2 | 15 | +IN2 | T/C + 2 |
| 7 | –CJ2 | CJC – 2 | 16 | –IN2 | T/C – 2 |
| 8 | +CJ3 | CJC + 3 | 17 | +IN3 | T/C + 3 |
| 9 | –CJ3 | CJC – 3 | 18 | –IN3 | T/C – 3 |



MG CO., LTD.
www.mgco.jp

## CIRCUIT DIAGRAM

Note: In order to improve EMC performance, bond the FG terminal to ground.
Caution: FG terminal is NOT a protective conductor terminal.

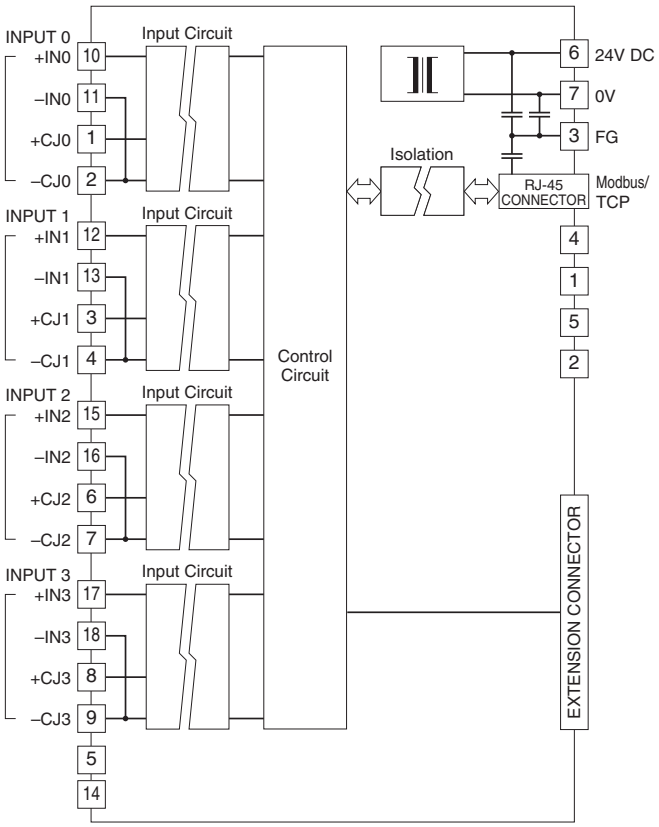


■ Input Connection Example

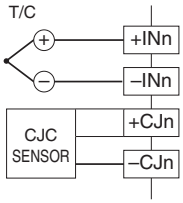

## RTD INPUT MODULE, 4 points

## MODEL: R7E-RS4

## SPECIFICATIONS

**Isolation**: Input 0 to input 1 to input 2 to input 3 to Ethernet to FG to power input
**Converted data range**: Engineering unit value (°C, K) × 10 (integer); No multiplication for °F
**Linearization**: Standard
**RTD**: Pt 100 (JIS '97, IEC), Pt 100 (JIS '89), JPt 100 (JIS '89), Pt 50 Ω (JIS '81), Ni 100, Cu 10, Cu 50
**Sensing current**: ≤ 1 mA
**Input resistance**: ≥ 1 MΩ
**Maximum leadwire resistance**: 100 Ω per wire
**Conversion accuracy**: ±1°C (±1.8°F);
±3°C (±5.4°F) for Cu 10
**Conversion rate**: 250 msec. or 1 sec.
**Response time**: Conversion rate × 2 + 50 msec. (0 – 90 %)
**Temperature coefficient**: ±0.015 %/°C (±0.008 %/°F) of max. span

| RTD | BURNOUT INDICATION (°C) | | CONFORMANCE RANGE (°C) |
|---|---|---|---|
| | Downscale | Upscale | |
| Pt 100 (JIS '97, IEC) | -240 | +900 | -200 to +850 |
| Pt 100 (JIS '89) | -240 | +900 | -200 to +660 |
| JPt 100 (JIS '89) | -236 | +560 | -200 to +510 |
| Pt 50 Ω (JIS '81) | -236 | +700 | -200 to +649 |
| Ni 100 | -100 | +252 | -80 to +250 |
| Cu 10 @ 25°C | -212 | +312 | -50 to +250 |
| Cu 50 | -100 | +200 | -50 to +150 |

| RTD | BURNOUT INDICATION (°F) | | CONFORMANCE RANGE (°F) |
|---|---|---|---|
| | Downscale | Upscale | |
| Pt 100 (JIS '97, IEC) | -400 | +1652 | -328 to +1562 |
| Pt 100 (JIS '89) | -400 | +1652 | -328 to +1220 |
| JPt 100 (JIS '89) | -393 | +1040 | -328 to +950 |
| Pt 50 Ω (JIS '81) | -393 | +1292 | -328 to +1200 |
| Ni 100 | -148 | +486 | -112 to +482 |
| Cu 10 @ 25°C | -350 | +594 | -58 to +482 |
| Cu 50 | -148 | +392 | -58 to +302 |

## OPERATING MODE SETTING

(*) Factory setting

**• RTD Type (SW1-5, 1-6, 1-7, 1-8)**

| SW1-5 | SW1-6 | SW1-7 | SW1-8 | RTD Type |
|---|---|---|---|---|
| OFF | OFF | OFF | OFF | Pt 100 (JIS '97, IEC) (*) |
| ON | OFF | OFF | OFF | Pt 100 (JIS '89) |
| OFF | ON | OFF | OFF | JPt 100 (JIS '89) |
| ON | ON | OFF | OFF | Pt 50 Ω (JIS '81) |
| OFF | OFF | ON | OFF | Ni 100 |
| ON | OFF | ON | OFF | Cu 10 @ 25°C |
| OFF | OFF | OFF | ON | Cu 50 |
| ON | ON | ON | ON | PC Configurator setting |

**• Conversion Rate (SW1-3)**

| SW1-3 | Conversion rate |
|---|---|
| OFF | 250 msec. (*) |
| ON | 1 sec. |

**• Burnout (SW1-4)**

| SW1-4 | Burnout |
|---|---|
| OFF | Upscale (*) |
| ON | Downscale |

**• Extension (SW1-1, 1-2)**

| SW1-1 | SW1-2 | Extension |
|---|---|---|
| OFF | OFF | No extension (*) |
| ON | OFF | Discrete input, 8 or 16 points |
| OFF | ON | Discrete output, 8 or 16 points |

## TERMINAL ASSIGNMENTS

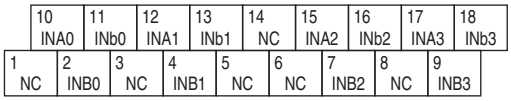


| NO. | ID | FUNCTION | NO. | ID | FUNCTION |
|---|---|---|---|---|---|
| 1 | NC | No connection | 10 | INA0 | RTD 0-A |
| 2 | INB0 | RTD 0-B | 11 | INb0 | RTD 0-b |
| 3 | NC | No connection | 12 | INA1 | RTD 1-A |
| 4 | INB1 | RTD 1-B | 13 | INb1 | RTD 1-b |
| 5 | NC | No connection | 14 | NC | No connection |
| 6 | NC | No connection | 15 | INA2 | RTD 2-A |
| 7 | INB2 | RTD 2-B | 16 | INb2 | RTD 2-b |
| 8 | NC | No connection | 17 | INA3 | RTD 3-A |
| 9 | INB3 | RTD 3-B | 18 | INb3 | RTD 3-b |



MG CO., LTD.
www.mgco.jp

## CIRCUIT DIAGRAM

Note: In order to improve EMC performance, bond the FG terminal to ground.
Caution: FG terminal is NOT a protective conductor terminal.

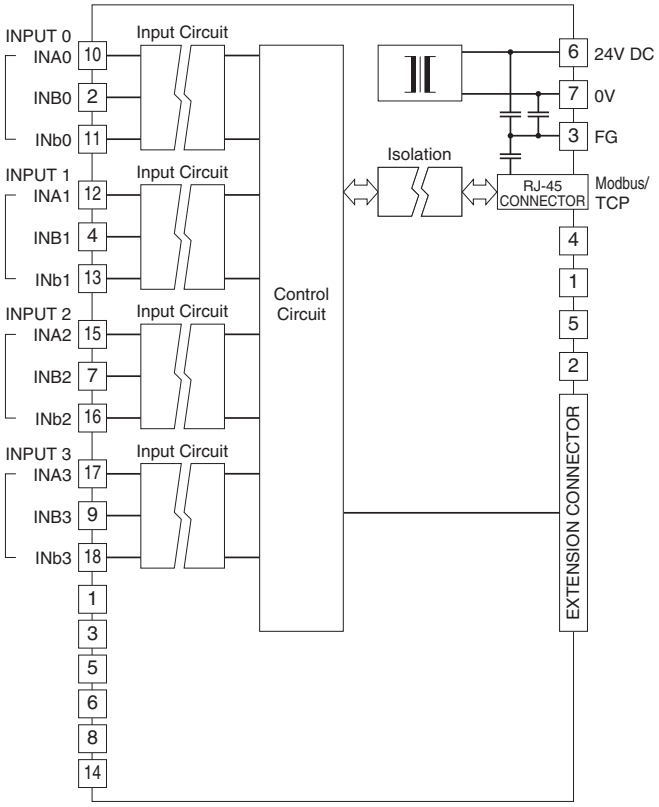


■ Input Connection Example

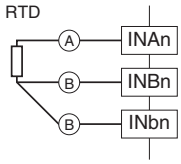

## POTENTIOMETER INPUT MODULE, 4 points

## MODEL: R7E-MS4

## SPECIFICATIONS

**Isolation**: Input 0 to input 1 to input 2 to input 3 to Ethernet to FG to power input
**Converted data range**: 0 – 10000 of the input range
**Potentiometer**: Total resistance 100 Ω – 20 kΩ
**Minimum span**: 50 % of total resistance
**Excitation**: Approx. 0.2 V DC
**Conversion rate / conversion accuracy**:
10 msec./±0.8 %, 20 msec./±0.4 %, 40 msec./±0.2 %, 80 msec./±0.1 %
**Response time**: Conversion rate × 2 + 50 msec. (0 – 90 %)
**Temperature coefficient**: ±0.015 %/°C (±0.008 %/°F)

## OPERATING MODE SETTING

(*) Factory setting
Note: Be sure to set unused SW1-5 through 1-8 to OFF.

**• Conversion Rate / Accuracy (SW1-3, 1-4)**

| SW1-3 | SW1-4 | Conversion rate / Accuracy |
|---|---|---|
| OFF | OFF | 80 msec. / ±0.1% (*) |
| ON | OFF | 40 msec. / ±0.2% |
| OFF | ON | 20 msec. / ±0.4% |
| ON | ON | 10 msec. / ±0.8% |

**• Extension (SW1-1, 1-2)**

| SW1-1 | SW1-2 | Extension |
|---|---|---|
| OFF | OFF | No extension (*) |
| ON | OFF | Discrete input, 8 or 16 points |
| OFF | ON | Discrete output, 8 or 16 points |

## TERMINAL ASSIGNMENTS

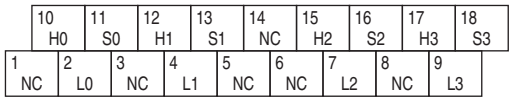


| NO. | ID | FUNCTION | NO. | ID | FUNCTION |
|---|---|---|---|---|---|
| 1 | NC | No connection | 10 | H0 | Pot H0 |
| 2 | L0 | Pot L0 | 11 | S0 | Pot S0 |
| 3 | NC | No connection | 12 | H1 | Pot H1 |
| 4 | L1 | Pot L1 | 13 | S1 | Pot S1 |
| 5 | NC | No connection | 14 | NC | No connection |
| 6 | NC | No connection | 15 | H2 | Pot H2 |
| 7 | L2 | Pot L2 | 16 | S2 | Pot S2 |
| 8 | NC | No connection | 17 | H3 | Pot H3 |
| 9 | L3 | Pot L3 | 18 | S3 | Pot S3 |

## CIRCUIT DIAGRAM

Note: In order to improve EMC performance, bond the FG terminal to ground.
Caution: FG terminal is NOT a protective conductor terminal.

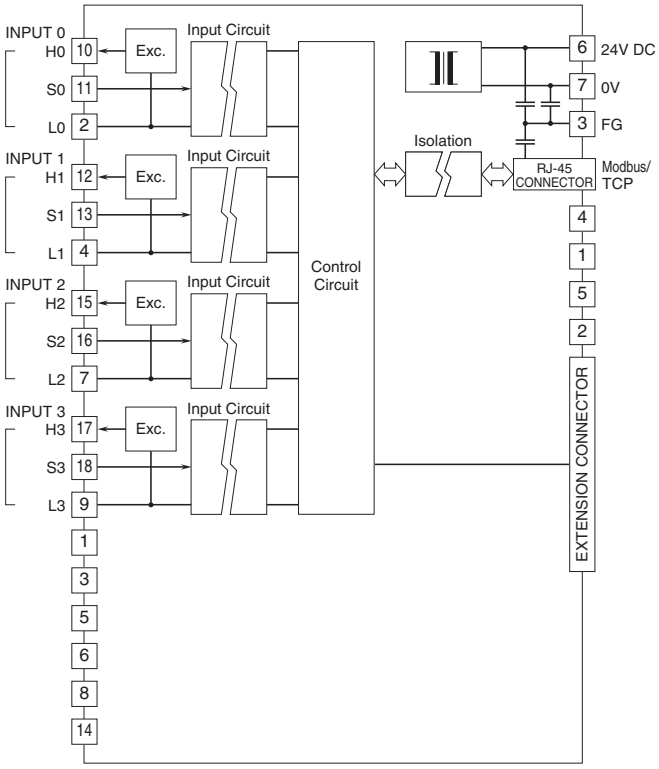


■ Input Connection Example

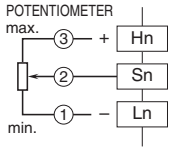




MG CO., LTD.
www.mgco.jp

## AC CURRENT INPUT MODULE, 4 points

(clamp-on current sensor CLSE use)

## MODEL: R7E-CT4E

## SPECIFICATIONS

**Isolation**: Input 0 to input 1 to input 2 to input 3 to Ethernet to FG to power input

**Converted data range**:
Engineering unit value (A) × 100 (Integer)
(Engineering unit value (A) × 1000 (Integer) for CLSE-R5)

**Input range (Optional)**
CLSE-R5: 0 – 5 A AC
CLSE-05: 0 – 50 A AC
CLSE-10: 0 – 100 A AC
CLSE-20: 0 – 200 A AC
CLSE-40: 0 – 400 A AC
CLSE-60: 0 – 600 A AC

**Frequency**: 50/60 Hz

**Overload capacity**: 120 % continuous

**Operational range**: 5 – 115 % of rating (Operational range for the CLSE-60 is limited up to approx. 109 % (65535).)
(Note: Use for the circuit not exceed 480 V)

**Conversion rate / conversion accuracy**:
10 msec./±2.0 %, 20 msec./±1.0 %, 40 msec./±0.5 %, 80 msec./±0.5 %
(The conversion accuracy does not include the accuracy of the sensor.)

**Response time**: ≤ 1.0 sec. (0 – 90 %)

**Temperature coefficient**: ±0.015 %/°C (±0.008 %/°F)

## OPERATING MODE SETTING

(*) Factory setting

**• Input Range (SW1-5, 1-6, 1-7, 1-8)**

| SW1-5 | SW1-6 | SW1-7 | SW1-8 | Input range |
|---|---|---|---|---|
| OFF | OFF | OFF | OFF | CLSE-60 (*) |
| ON | OFF | OFF | OFF | CLSE-40 |
| OFF | ON | OFF | OFF | CLSE-20 |
| ON | ON | OFF | OFF | CLSE-10 |
| OFF | OFF | ON | OFF | CLSE-05 |
| ON | OFF | ON | OFF | CLSE-R5 |
| ON | ON | ON | ON | PC Configurator setting |

**• Conversion Rate / Accuracy (SW1-3, 1-4)**

| SW1-3 | SW1-4 | Conversion rate / Accuracy |
|---|---|---|
| OFF | OFF | 80 msec. / ±0.5% (*) |
| ON | OFF | 40 msec. / ±0.5% |
| OFF | ON | 20 msec. / ±1.0% |
| ON | ON | 10 msec. / ±2.0% |

**• Extension (SW1-1, 1-2)**

| SW1-1 | SW1-2 | Extension |
|---|---|---|
| OFF | OFF | No extension (*) |
| ON | OFF | Discrete input, 8 or 16 points |
| OFF | ON | Discrete output, 8 or 16 points |

## TERMINAL ASSIGNMENTS

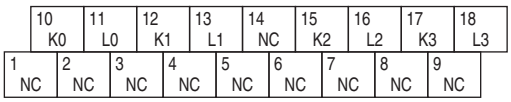


| NO. | ID | FUNCTION | NO. | ID | FUNCTION |
|---|---|---|---|---|---|
| 1 | NC | No connection | 10 | K0 | AC current K0 |
| 2 | NC | No connection | 11 | L0 | AC current L0 |
| 3 | NC | No connection | 12 | K1 | AC current K1 |
| 4 | NC | No connection | 13 | L1 | AC current L1 |
| 5 | NC | No connection | 14 | NC | No connection |
| 6 | NC | No connection | 15 | K2 | AC current K2 |
| 7 | NC | No connection | 16 | L2 | AC current L2 |
| 8 | NC | No connection | 17 | K3 | AC current K3 |
| 9 | NC | No connection | 18 | L3 | AC current L3 |



MG CO., LTD.
www.mgco.jp

## CIRCUIT DIAGRAM

Note: In order to improve EMC performance, bond the FG terminal to ground.
Caution: FG terminal is NOT a protective conductor terminal.

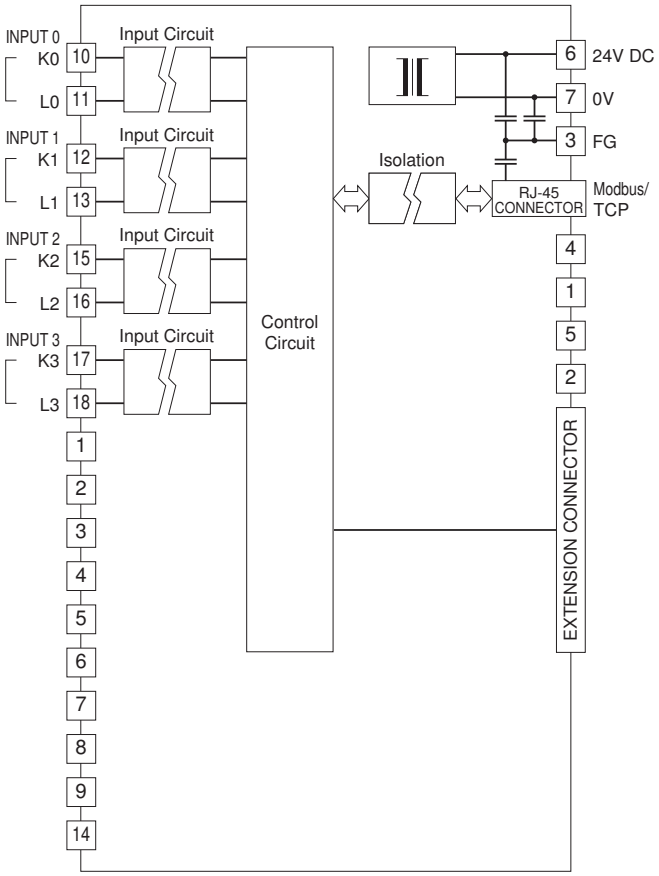


Input Connection Example

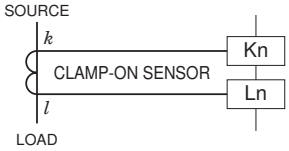

**TOTALIZED PULSE INPUT MODULE, 8 points**

## MODEL: R7E-PA8

## SPECIFICATIONS

**Common**: Positive or negative common (NPN/PNP) per 8 points
**Number of I/O**: Input, 8 points
**Pulse Input status indicator**: LED turns ON with contact ON
**Isolation**: Input to Ethernet to FG to power input
■ **External excitation (PNP, NPN input)**
**Sensing voltage**: 24 V DC ±10 %; ripple 5 %p-p max
**ON voltage / ON current**: ≥ 16 V DC (input terminal - Cx) / ≤ 3.7 mA
**OFF voltage / OFF current**: ≤ 5 V DC (input terminal - Cx) / ≤ 1 mA
**Voltage pulse input**
**ON voltage / ON current**: ≥ 16 V DC (input terminal - Cx) / ≤ 3.7 mA
**OFF voltage / OFF current**: ≤ 5 V DC (input terminal - Cx) / ≤ 1 mA
**Input current**: ≤ 5.5 mA per point at 24 V DC
**Input resistance**: Approx. 4.4 kΩ
**ON delay**: ≤ 2.0 msec.
**OFF delay**: ≤ 2.0 msec.
**Max. Frequency**: 100 Hz (This unit is designed to be able to accept a frequency up to 100 Hz, however,'chattering' contact must be avoided for accurate measuring of such high frequency. Use relays that do not cause any chattering.)
**Minimum ON/OFF pulse requirements**: 5 msec.
**Accumulated pulse count**: 0 - 4 294 967 295
**Max. accumulated pulse count**: 1 000 - 4 294 967 295 (Factory default: 9 999 999)
**Overflow**: 0 or 1 (Factory default: 0)

## OPERATING MODE SETTING

(*) Factory setting
Note: Be sure to set unused SW1-3 through 1-8 to OFF.

**• Extension (SW1-1, 1-2)**

| SW1-1 | SW1-2 | Extension |
|---|---|---|
| OFF | OFF | No extension (*) |
| ON | OFF | Discrete input, 8 or 16 points |
| OFF | ON | Discrete output, 8 or 16 points |

## TERMINAL ASSIGNMENTS

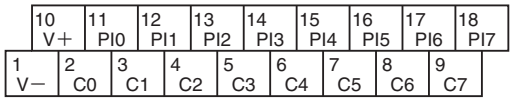


| NO. | ID | FUNCTION | NO. | ID | FUNCTION |
|---|---|---|---|---|---|
| 1 | V – | Power (–) | 10 | V + | Power (+) |
| 2 | C0 | Common | 11 | PI0 | Input 0 |
| 3 | C1 | Common | 12 | PI1 | Input 1 |
| 4 | C2 | Common | 13 | PI2 | Input 2 |
| 5 | C3 | Common | 14 | PI3 | Input 3 |
| 6 | C4 | Common | 15 | PI4 | Input 4 |
| 7 | C5 | Common | 16 | PI5 | Input 5 |
| 8 | C6 | Common | 17 | PI6 | Input 6 |
| 9 | C7 | Common | 18 | PI7 | Input 7 |



MG CO., LTD.
www.mgco.jp

## CIRCUIT DIAGRAM

Caution: FG terminal is NOT a protective conductor terminal.

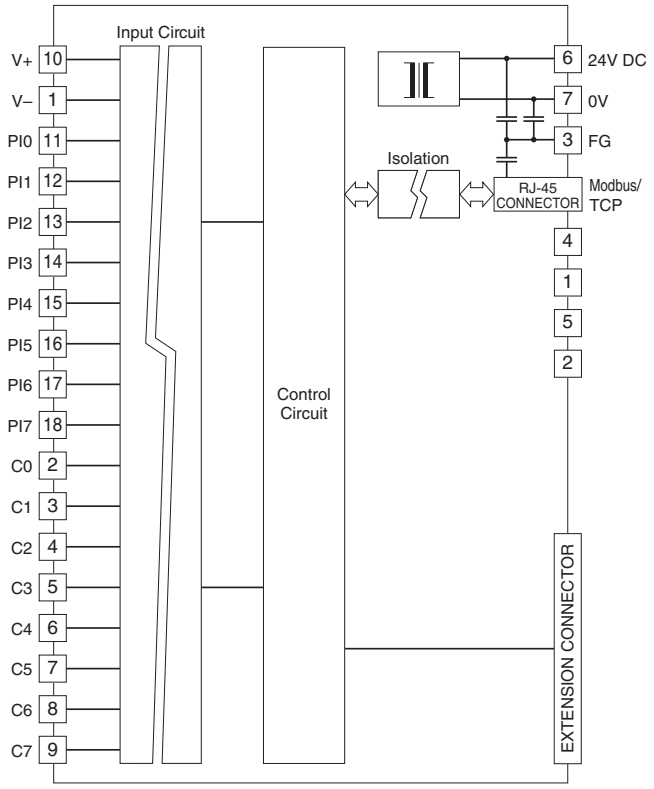


■ **Input Circuit**

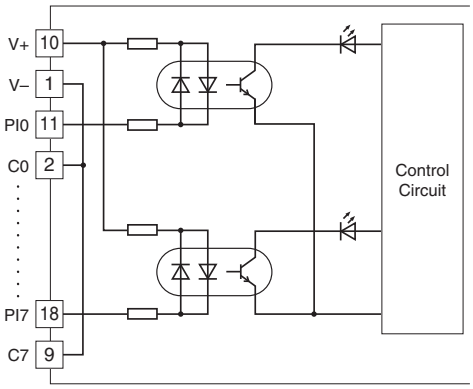


■ **Input Connection Examples**

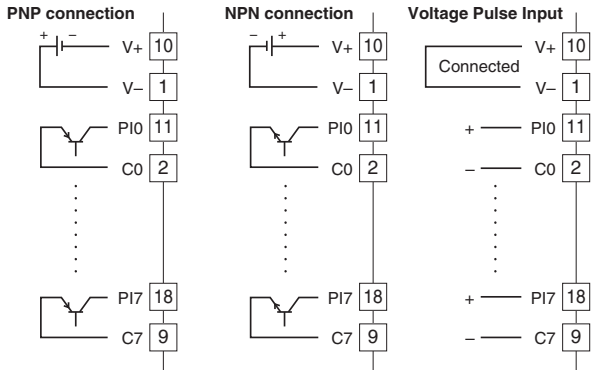




MG CO., LTD.
www.mgco.jp

## DC VOLTAGE OUTPUT MODULE, 2 points

## MODEL: R7E-YV2

## SPECIFICATIONS

**Isolation**: Output 0 to output 1 to Ethernet to FG to power input
**Converted data range**: 0 – 10000 of the output range
**Output range**
**Wide span voltage**: -10 – +10 V DC, -5 – +5 V DC, 0 – 10 V DC, 0 – 5 V DC, 1 – 5 V DC
**Narrow span voltage**: -1 – +1 V DC, 0 – 1 V DC, -0.5 – +0.5 V DC
**Operational range**: -15 – +115 % of the output range (except -10 – +10 V DC);
approx. -11.5 – +11.5 V DC (-10 – +10 V DC)
**Load resistance**: ≥ 100 kΩ
**Conversion accuracy**: ±0.1 %
**Response time**: 250 msec. (0 – 90 %)
**Temperature coefficient**: ±0.015 %/°C (±0.008 %/°F)

## OPERATING MODE SETTING

(*) Factory setting
Note: Be sure to set unused SW1-3 to OFF.

**• Output Range (SW1-5, 1-6, 1-7, 1-8)**

| SW1-5 | SW1-6 | SW1-7 | SW1-8 | Output range |
|---|---|---|---|---|
| OFF | OFF | OFF | OFF | -10 – +10 V DC (*) |
| ON | OFF | OFF | OFF | -5 – +5 V DC |
| OFF | ON | OFF | OFF | -1 – +1 V DC |
| ON | ON | OFF | OFF | 0 – 10 V DC |
| OFF | OFF | ON | OFF | 0 – 5 V DC |
| ON | OFF | ON | OFF | 1 – 5 V DC |
| OFF | ON | ON | OFF | 0 – 1 V DC |
| ON | ON | ON | OFF | -0.5 – +0.5 V DC |
| ON | ON | ON | ON | PC Configurator setting |

**• Output at the Loss of Communication (SW1-4)**

| SW1-4 | Output at the loss of communication |
|---|---|
| OFF | Reset the output (to -15% or approx. -11.5V DC) |
| ON | Hold the output (*)<br>(maintains the last data received normally) |

**• Extension (SW1-1, 1-2)**

| SW1-1 | SW1-2 | Extension |
|---|---|---|
| OFF | OFF | No extension (*) |
| ON | OFF | Discrete input, 8 or 16 points |
| OFF | ON | Discrete output, 8 or 16 points |

## TERMINAL ASSIGNMENTS

| NO. | ID | FUNCTION | NO. | ID | FUNCTION |
|---|---|---|---|---|---|
| 1 | NC | No connection | 6 | NC | No connection |
| 2 | COM0 | Common 0 | 7 | VH0 | Wide span volt. 0 |
| 3 | COM0 | Common 0 | 8 | VL0 | Narrow span volt. 0 |
| 4 | COM1 | Common 1 | 9 | VH1 | Wide span volt. 1 |
| 5 | COM1 | Common 1 | 10 | VL1 | Narrow span volt. 1 |

## CIRCUIT DIAGRAM

Note: In order to improve EMC performance, bond the FG terminal to ground.
Caution: FG terminal is NOT a protective conductor terminal.

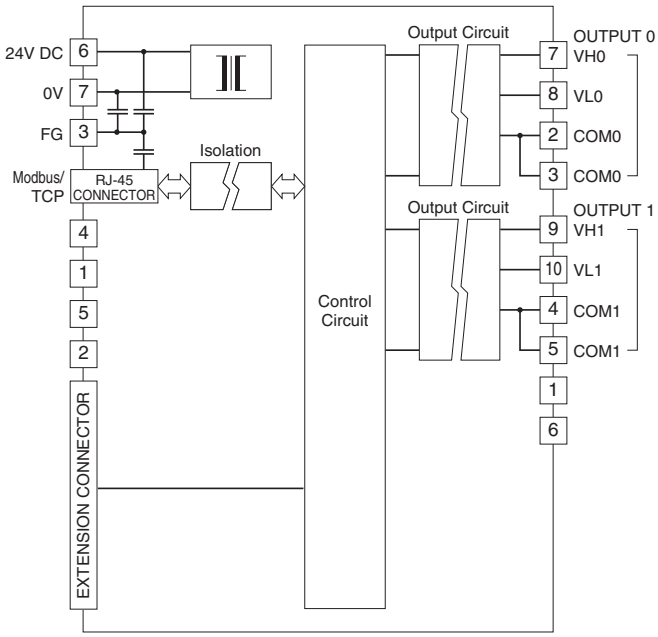


■ Output Connection Examples

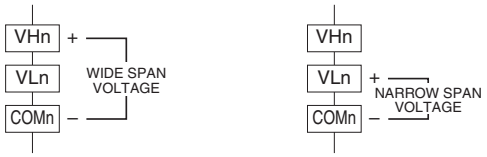




MG CO., LTD.
www.mgco.jp

## DC CURRENT OUTPUT MODULE, 2 points

## MODEL: R7E-YS2

## SPECIFICATIONS

**Isolation**: Output 0 to output 1 to Ethernet to FG to power input
**Converted data range**: 0 – 10000 of the output range
**Output range**: 4 – 20 mA DC
**Load resistance**: ≤ 600Ω
**Conversion accuracy**: ±0.1 %
**Response time**: 250 msec. (0 – 90 %)
**Temperature coefficient**: ±0.015 %/°C (±0.008 %/°F)

## OPERATING MODE SETTING

(*) Factory setting
Note: Be sure to set unused SW1-3 and 1-5 through 1-8 to OFF.

**• Output at the Loss of Communication (SW1-4)**

| SW1-4 | Output at the loss of communication |
|---|---|
| OFF | Reset the output (to -15%) |
| ON | Hold the output (*)<br>(maintains the last data received normally) |

**• Extension (SW1-1, 1-2)**

| SW1-1 | SW1-2 | Extension |
|---|---|---|
| OFF | OFF | No extension (*) |
| ON | OFF | Discrete input, 8 or 16 points |
| OFF | ON | Discrete output, 8 or 16 points |

## TERMINAL ASSIGNMENTS

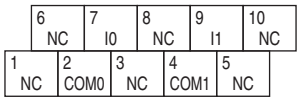


| NO. | ID | FUNCTION | NO. | ID | FUNCTION |
|---|---|---|---|---|---|
| 1 | NC | No connection | 6 | NC | No connection |
| 2 | COM0 | Common 0 | 7 | I0 | Current 0 |
| 3 | NC | No connection | 8 | NC | No connection |
| 4 | COM1 | Common 1 | 9 | I1 | Current 1 |
| 5 | NC | No connection | 10 | NC | No connection |

## CIRCUIT DIAGRAM

Note: In order to improve EMC performance, bond the FG terminal to ground.
Caution: FG terminal is NOT a protective conductor terminal.

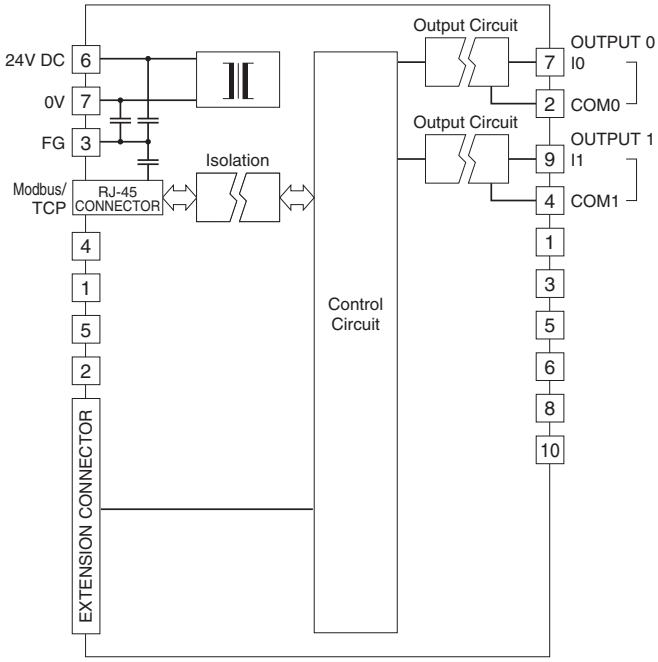




MG CO., LTD.
www.mgco.jp

**DISCRETE INPUT EXTENSION MODULE, 8 points**

## MODEL: R7E-EA8

## SPECIFICATIONS

**Common**: Positive or negative common (NPN/PNP) per 8 points
**Number of I/O**: Input, 8 points
**Maximum inputs applicable at once**: No limit (at 24 V DC)
**Input status indicator**: LED turns ON with contact ON
**Isolation**: Input to internal circuits
**Rated input voltage**: 24 V DC ±10 %; ripple 5 %p-p max.
**ON voltage / current**: ≥ 15 V DC (input – COM) / ≥ 3.5 mA
**OFF voltage / current**: ≤ 5 V DC (input – COM) / ≤ 1 mA
**Input current**: ≤ 5.5 mA per point at 24 V DC
**Input resistance**: Approx. 4.4 kΩ
**ON delay**: ≤ 2.0 msec.
**OFF delay**: ≤ 2.0 msec.

## TERMINAL ASSIGNMENTS

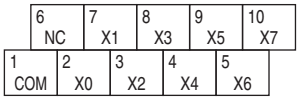


| NO. | ID | FUNCTION | NO. | ID | FUNCTION |
|---|---|---|---|---|---|
| 1 | COM | Common | 6 | NC | No Connection |
| 2 | X0 | Input 0 | 7 | X1 | Input 1 |
| 3 | X2 | Input 2 | 8 | X3 | Input 3 |
| 4 | X4 | Input 4 | 9 | X5 | Input 5 |
| 5 | X6 | Input 6 | 10 | X7 | Input 7 |

## CIRCUIT DIAGRAM

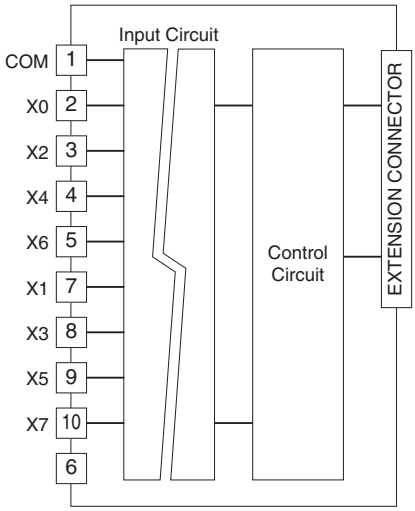


■ **Input Circuit**

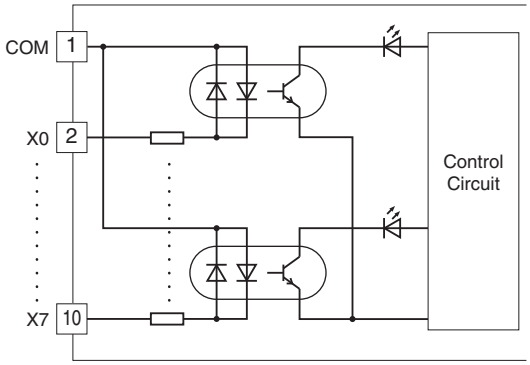


■ **Input Connection Examples**

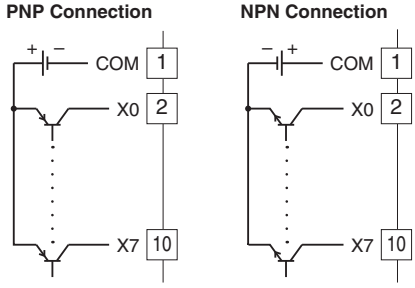




MG CO., LTD.
www.mgco.jp

**DISCRETE INPUT EXTENSION MODULE, 16 points**

## MODEL: R7E-EA16

## SPECIFICATIONS

**Common**: Positive or negative common (NPN/PNP) per 16 points
**Number of I/O**: Input, 16 points
**Maximum inputs applicable at once**: No limit (at 24 V DC)
**Input status indicator**: LED turns ON with contact ON
**Isolation**: Input to internal circuits
**Rated input voltage**: 24 V DC ±10 %; ripple 5 %p-p max.
**ON voltage / current**: ≥ 15 V DC (input – COM) / ≥ 3.5 mA
**OFF voltage / current**: ≤ 5 V DC (input – COM) / ≤ 1 mA
**Input current**: ≤ 5.5 mA per point at 24 V DC
**Input resistance**: Approx. 4.4 kΩ
**ON delay**: ≤ 2.0 msec.
**OFF delay**: ≤ 2.0 msec.

## TERMINAL ASSIGNMENTS

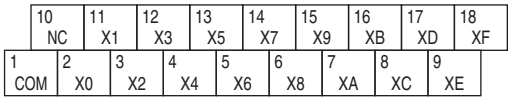


| NO. | ID | FUNCTION | NO. | ID | FUNCTION |
|---|---|---|---|---|---|
| 1 | COM | Common | 10 | NC | No Connection |
| 2 | X0 | Input 0 | 11 | X1 | Input 1 |
| 3 | X2 | Input 2 | 12 | X3 | Input 3 |
| 4 | X4 | Input 4 | 13 | X5 | Input 5 |
| 5 | X6 | Input 6 | 14 | X7 | Input 7 |
| 6 | X8 | Input 8 | 15 | X9 | Input 9 |
| 7 | XA | Input 10 | 16 | XB | Input 11 |
| 8 | XC | Input 12 | 17 | XD | Input 13 |
| 9 | XE | Input 14 | 18 | XF | Input 15 |

## CIRCUIT DIAGRAM

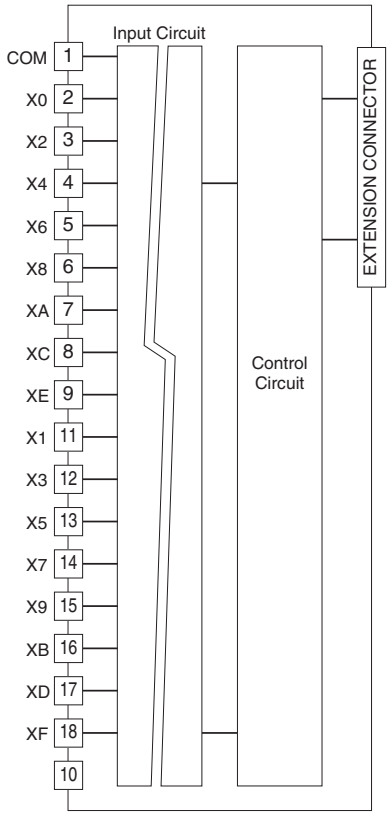


■ **Input Circuit**

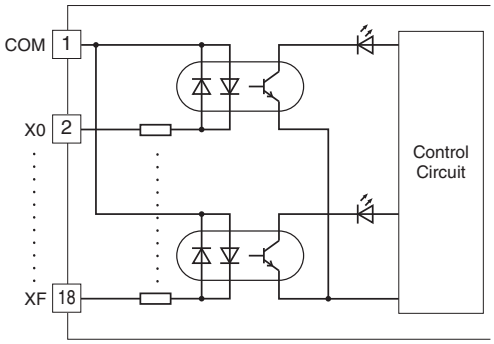


■ **Input Connection Examples**

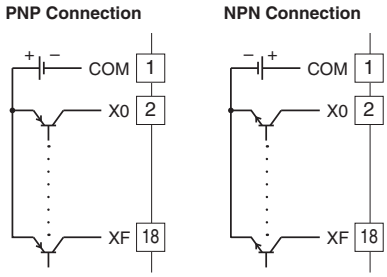




MG CO., LTD.
www.mgco.jp

**NPN TRANSISTOR OUTPUT EXTENSION MODULE, 8 points**

## MODEL: R7E-EC8A

## SPECIFICATIONS

**Common**: Negative common (NPN) per 8 points
**Number of I/O**: Output, 8 points
**Maximum outputs applicable at once**: No limit (at 24 V DC)
**Output status indicator**: LED turns ON with contact ON
**Isolation**: Output to internal circuits
**Rated load voltage**: 24 V DC ±10 %
**Rated output current**: 0.25 A per point, 2.0 A per common
**Residual voltage**: ≤ 1.2 V
**Leakage current**: ≤ 0.1 mA
**ON delay**: ≤ 0.5 msec.
**OFF delay**: ≤ 1.5 msec.
(When driving an inductive load, connect a diode in parallel with the load.)

## TERMINAL ASSIGNMENTS

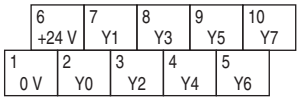


| NO. | ID | FUNCTION | NO. | ID | FUNCTION |
|---|---|---|---|---|---|
| 1 | 0 V | 0 V (common) | 6 | +24 V | 24 V DC |
| 2 | Y0 | Output 0 | 7 | Y1 | Output 1 |
| 3 | Y2 | Output 2 | 8 | Y3 | Output 3 |
| 4 | Y4 | Output 4 | 9 | Y5 | Output 5 |
| 5 | Y6 | Output 6 | 10 | Y7 | Output 7 |

## CIRCUIT DIAGRAM

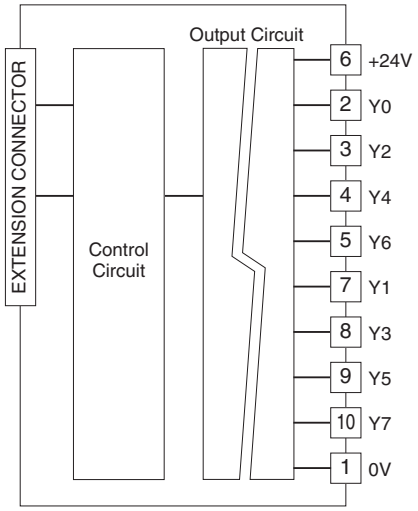


■ **Output Circuit**

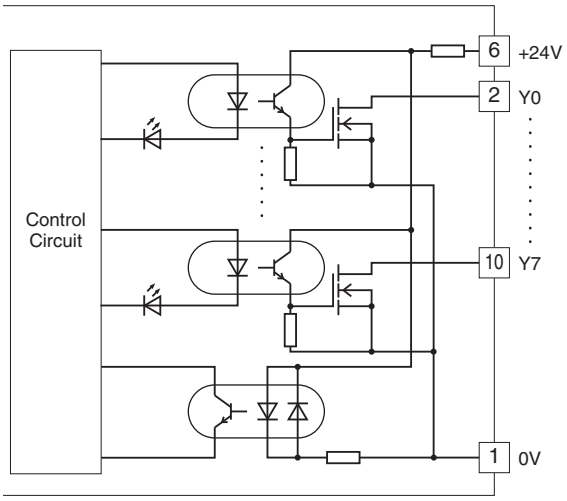


■ **Output Connection Example**

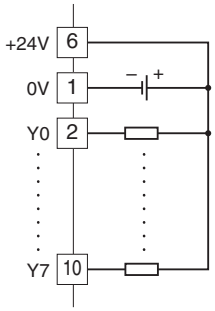




MG CO., LTD.
www.mgco.jp

**NPN TRANSISTOR OUTPUT EXTENSION MODULE, 16 points**

## MODEL: R7E-EC16A

## SPECIFICATIONS

**Common**: Negative common (NPN) per 16 points
**Number of I/O**: Output, 16 points
**Maximum outputs applicable at once**: No limit (at 24 V DC)
**Output status indicator**: LED turns ON with contact ON
**Isolation**: Output to internal circuits
**Rated load voltage**: 24 V DC ±10 %
**Rated output current**: 0.25 A per point, 2.0 A per common
**Residual voltage**: ≤ 1.2 V
**Leakage current**: ≤ 0.1 mA
**ON delay**: ≤ 0.5 msec.
**OFF delay**: ≤ 1.5 msec.
(When driving an inductive load, connect a diode in parallel with the load.)

## TERMINAL ASSIGNMENTS

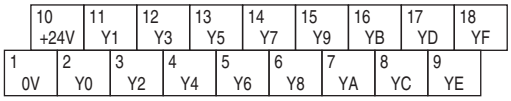


| NO. | ID | FUNCTION | NO. | ID | FUNCTION |
|---|---|---|---|---|---|
| 1 | 0 V | 0 V (common) | 10 | +24 V | 24 V DC |
| 2 | Y0 | Output 0 | 11 | Y1 | Output 1 |
| 3 | Y2 | Output 2 | 12 | Y3 | Output 3 |
| 4 | Y4 | Output 4 | 13 | Y5 | Output 5 |
| 5 | Y6 | Output 6 | 14 | Y7 | Output 7 |
| 6 | Y8 | Output 8 | 15 | Y9 | Output 9 |
| 7 | YA | Output 10 | 16 | YB | Output 11 |
| 8 | YC | Output 12 | 17 | YD | Output 13 |
| 9 | YE | Output 14 | 18 | YF | Output 15 |

## CIRCUIT DIAGRAM

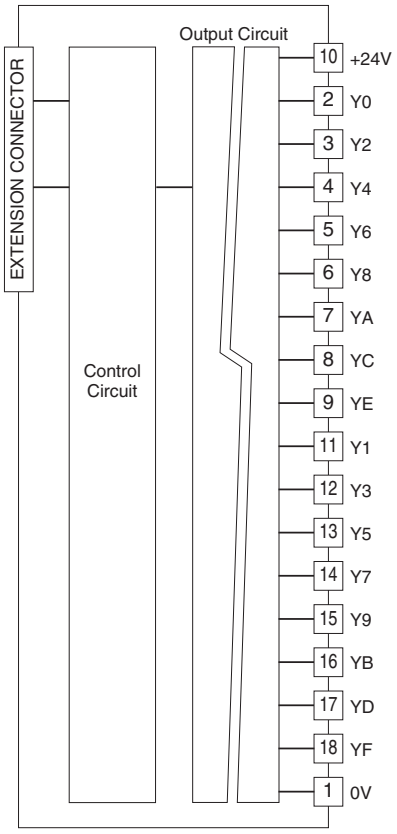


■ **Output Circuit**

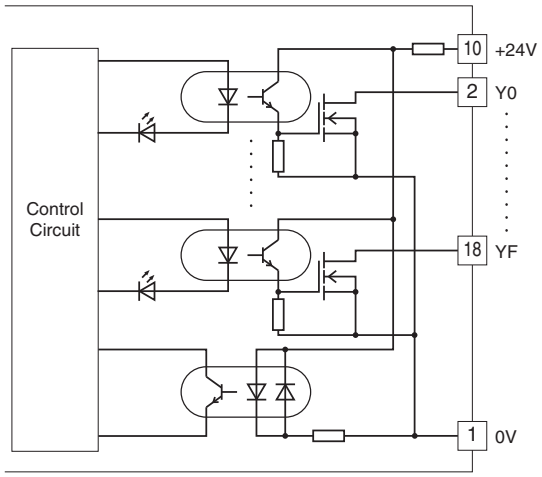


■ **Output Connection Example**

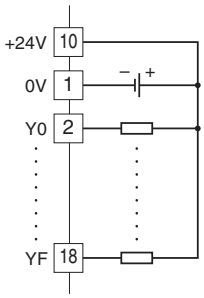




MG CO., LTD.
www.mgco.jp

**PNP TRANSISTOR OUTPUT EXTENSION MODULE, 8 points**

## MODEL: R7E-EC8B

## SPECIFICATIONS

**Common**: Positive common (PNP) per 8 points
**Number of I/O**: Output, 8 points
**Maximum outputs applicable at once**: No limit (at 24 V DC)
**Output status indicator**: LED turns ON with contact ON
**Isolation**: Output to internal circuits
**Rated load voltage**: 24 V DC ±10 %
**Rated output current**: 0.25 A per point, 2.0 A per common
**Residual voltage**: ≤ 1.2 V
**Leakage current**: ≤ 0.1 mA
**ON delay**: ≤ 0.5 msec.
**OFF delay**: ≤ 1.5 msec.
(When driving an inductive load, connect a diode in parallel with the load.)

## TERMINAL ASSIGNMENTS

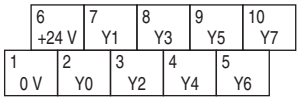


| NO. | ID | FUNCTION | NO. | ID | FUNCTION |
|---|---|---|---|---|---|
| 1 | 0 V | 0 V | 6 | +24 V | 24 V DC (common) |
| 2 | Y0 | Output 0 | 7 | Y1 | Output 1 |
| 3 | Y2 | Output 2 | 8 | Y3 | Output 3 |
| 4 | Y4 | Output 4 | 9 | Y5 | Output 5 |
| 5 | Y6 | Output 6 | 10 | Y7 | Output 7 |

## CIRCUIT DIAGRAM

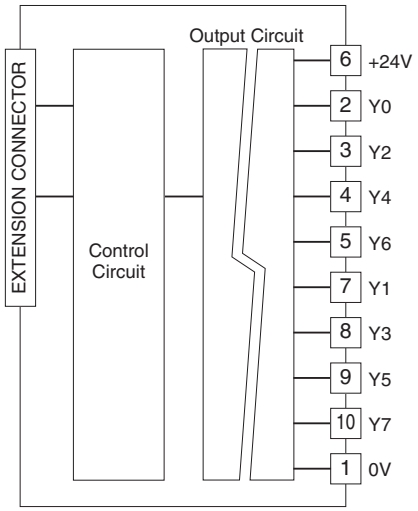


■ **Output Circuit**

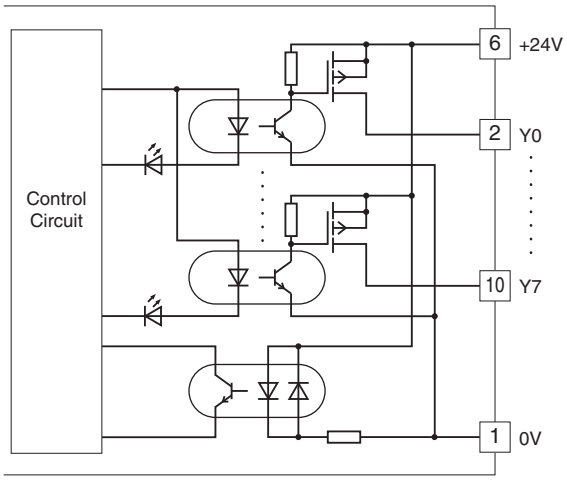


■ **Output Connection Example**

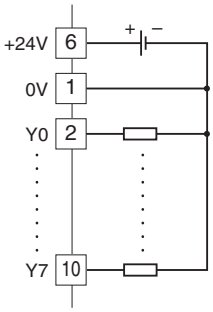




MG CO., LTD.
www.mgco.jp

**PNP TRANSISTOR OUTPUT EXTENSION MODULE, 16 points**

## MODEL: R7E-EC16B

## SPECIFICATIONS

**Common**: Positive common (PNP) per 16 points
**Number of I/O**: Output, 16 points
**Maximum outputs applicable at once**: No limit (at 24 V DC)
**Output status indicator**: LED turns ON with contact ON
**Isolation**: Output to internal circuits
**Rated load voltage**: 24 V DC ±10 %
**Rated output current**: 0.25 A per point, 2.0 A per common
**Residual voltage**: ≤ 1.2 V
**Leakage current**: ≤ 0.1 mA
**ON delay**: ≤ 0.5 msec.
**OFF delay**: ≤ 1.5 msec.
(When driving an inductive load, connect a diode in parallel with the load.)

## TERMINAL ASSIGNMENTS

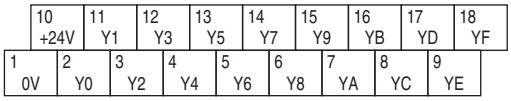


| NO. | ID | FUNCTION | NO. | ID | FUNCTION |
|---|---|---|---|---|---|
| 1 | 0 V | 0 V | 10 | +24 V | 24 V DC (common) |
| 2 | Y0 | Output 0 | 11 | Y1 | Output 1 |
| 3 | Y2 | Output 2 | 12 | Y3 | Output 3 |
| 4 | Y4 | Output 4 | 13 | Y5 | Output 5 |
| 5 | Y6 | Output 6 | 14 | Y7 | Output 7 |
| 6 | Y8 | Output 8 | 15 | Y9 | Output 9 |
| 7 | YA | Output 10 | 16 | YB | Output 11 |
| 8 | YC | Output 12 | 17 | YD | Output 13 |
| 9 | YE | Output 14 | 18 | YF | Output 15 |

## CIRCUIT DIAGRAM

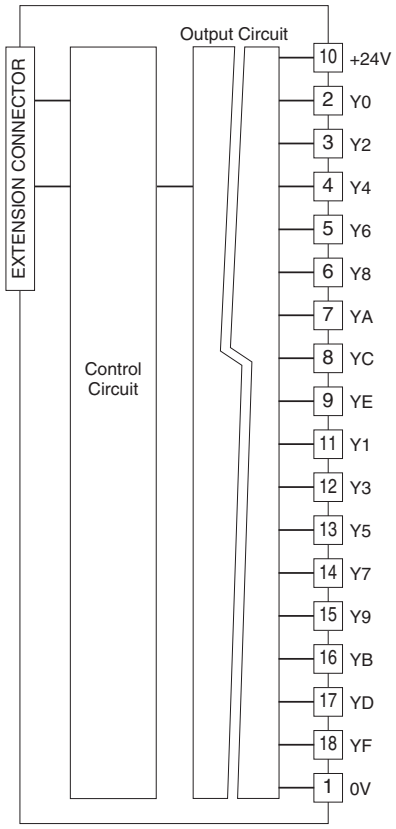


■ **Output Circuit**

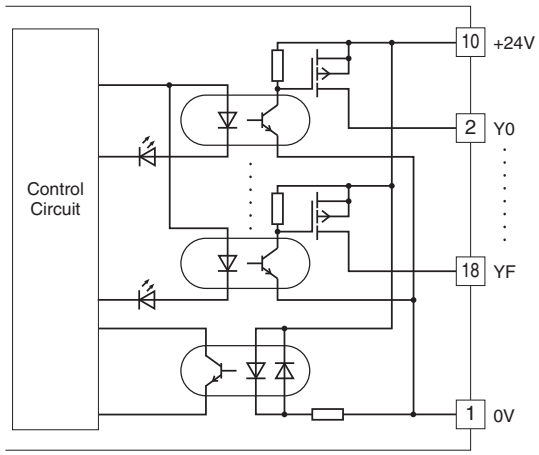


■ **Output Connection Example**

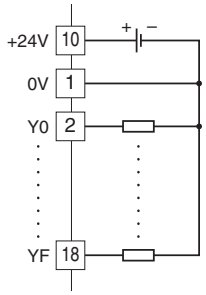




MG CO., LTD.
www.mgco.jp

⚠ Specifications are subject to change without notice.



MG CO., LTD.
www.mgco.jp