Remote I/O R7F4HEIP Series

EtherNet/IP I/O MODULE

(NPN discrete input, 16 points, tension clamp terminal block)

Functions & Features

- 16 points NPN discrete input module for EtherNet/IP
- Supports DLR (Device Level Ring) to form a ring topology

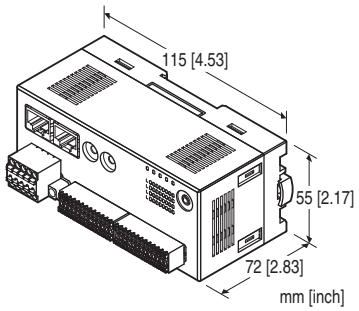

MODEL: R7F4HEIP-DA16A-4-R[1]

ORDERING INFORMATION

- Code number: R7F4HEIP-DA16A-4-R[1]

Specify a code from below for [1].
(e.g. R7F4HEIP-DA16A-4-R/Q)

- Specify the specification for option code /Q
(e.g. /C01)

I/O TYPE

DA16A: NPN discrete input, 16 points

TERMINAL BLOCK: 4

Tension clamp terminal block for power supply
RJ-45 Modular jack for communication
Tension clamp terminal block for I/O

POWER INPUT

DC power

R: 24 V DC
(Operational voltage range: ±10 %; ripple 10 %p-p max.)

[1] OPTIONS

blank: none
/Q: With options (specify the specification)

SPECIFICATIONS OF OPTION: Q

COATING (For the detail, refer to our web site.)

/C01: Silicone coating
/C02: Polyurethane coating
/C03: Rubber coating

RELATED PRODUCTS

- PC configurator software (model: R7CFG)
- EDS file

The EDS file and configurator software are downloadable at our web site.
A dedicated cable is required to connect the module to the PC. Please refer to the internet software download site or the users manual for the PC configurator for applicable cable types.

GENERAL SPECIFICATIONS

Connection
EtherNet/IP: RJ-45 Modular Jack
Power supply, exc. supply, input: Tension clamp terminal
Housing material: Flame-resistant resin (gray)
Isolation: Input or exc. supply to EtherNet/IP or FE to power
Status indicator LED: PWR, LNK1, LNK2
(Refer to the instruction manual)
Discrete intput status indicator LED: Green LED turns on with input ON
Read rate: Selectable with R7CFG

EtherNet/IP COMMUNICATION

Communication Standard: IEEE 802.3u
Transmission: 10BASE-T, 100BASE-TX
Baud rate: 10/100 Mbps (Auto Negotiation function)
Protocol: EtherNet/IP
Max. number of socket connections: 3
Connection type: Exclusive owner / Listen only / Input only
Transmission media: 10BASE-T (STP, Category 5), 100BASE-TX (STP, Category 5e)
Network topology: Line, star and ring
Max. length of fieldbus segment: 100 meters
IP address: 192.168.0.250 (factory setting);
Only host address in IP address is configurable via rotary switches, the other items via PC configurator software (model: R7CFG).
DLR supported
Port No.: 2222, 44818
I/O data size: One (1) word
Status indicator LEDs: MS, NS (Refer to the instruction manual for details)

MG CO., LTD.
www.mgco.jp

INPUT SPECIFICATIONS

Common: Positive common (NPN), 8 points per common
Numbers of input: 16
Maximum inputs applicable at once: No limit (at 24 V DC)
Rated input voltage: 24 V DC ±10 %; ripple 5 %p-p max.
ON voltage / current: ≥ 15 V DC (X0 to X15 input teriminal – +24 V) / ≥ 3.5 mA
OFF voltage / current: ≤ 5 V DC (X0 to X15 input teriminal – +24 V) / ≤ 1.0 mA
Input current: ≤ 5.5 mA per point at 24 V DC
Input resistance: Approx. 4.4 kΩ
ON delay: ≤ 0.2 msec.
OFF delay: ≤ 0.5 msec.

INSTALLATION

Current consumption
•**DC**: Approx. 70 mA
(contact I/O load charge is not included)
Operating temperature: -10 to +55°C (14 to 131°F)
Storage temperature: -20 to +65°C (-4 to +149°F)
Operating humidity: 30 to 90 %RH (non-condensing)
Atmosphere: No corrosive gas or heavy dust
Mounting: Surface or DIN rail (35 mm rail)
Weight: 170 g (0.37 lb)

PERFORMANCE

Insulation resistance: ≥ 100 MΩ with 500 V DC
Dielectric strength: 1500 V AC @ 1 minute
(input or exc. supply to EtherNet/IP or FE to power)

STANDARDS & APPROVALS

EU conformity:
EMC Directive
EMI EN 61000-6-4
EMS EN 61000-6-2
RoHS Directive

PC CONFIGURATOR

The following parameters can be set with using PC Configurator Software (model: R7CFG)
Refer to the users manual for the R7CFG for detailed operation of the software program.

■ CHANNEL BATCH SETTING

PARAMETER	SETTING RANGE	DEFAULT
Conversion rate	1ms, 5ms, 10ms, 20ms, 50ms, 70ms, 100ms, 200ms	10ms

■ EtherNet SETTING

PARAMETER	SETTING RANGE	DEFAULT
IP Address	0.0.0.0 - 255.255.255.255	192.168.0.250
Subnet Mask	0.0.0.0 - 255.255.255.255	255.255.255.0
Default Gateway	0.0.0.0 - 255.255.255.255	192.168.0.1
TimeOut	0 - 32767 (0.1 sec.)	30 (0.1 sec.)

MG CO., LTD.
www.mgco.jp

EXTERNAL VIEW

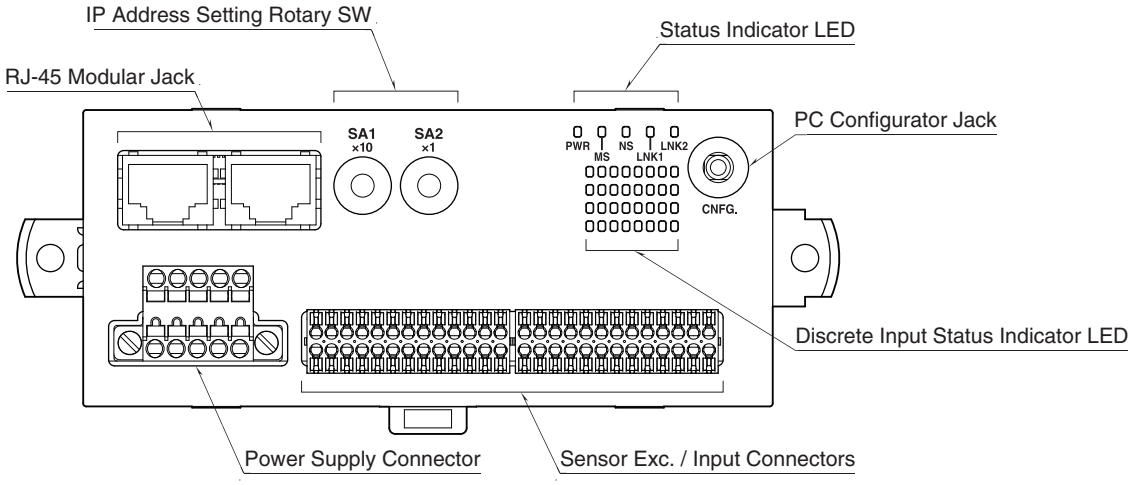

TERMINAL ASSIGNMENTS

■SENSOR EXC. / INPUT CONNECTION

Applicable connector: DFMC0,5/13-ST-2,54 (Phoenix Contact) (included in the package)
Applicable wire size: 0.14 – 0.5mm^2, stripped length 7mm
Recommended solderless terminal:
· AI0,14-6GY 0.14mm^2 (Phoenix Contact)
· AI0,14-8GY 0.14mm^2 (Phoenix Contact)
· AI0,25-6YE 0.25mm^2 (Phoenix Contact))
· AI0,25-8YE 0.25mm^2 (Phoenix Contact)
· AI0,25-7 0.25mm^2 (Phoenix Contact)
· AI0,34-7 0.34mm^2 (Phoenix Contact)

Note: If the stripped length does not match the length of recommended solderless terminal, adjust to the stripped length of 7mm by cutting the terminal if it is too long, or by extending the wire if the terminal is too short.

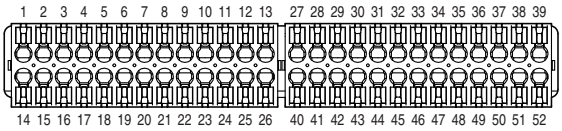

PIN No.	ID	FUNCTION	PIN No.	ID	FUNCTION
1	+24V1	24V DC	27	+24V2	24V DC
2	X0	Input 0	28	X8	Input 8
3	+24V1	24V DC	29	+24V2	24V DC
4	GND1	0V	30	GND2	0V
5	X2	Input 2	31	X10	Input 10
6	+24V1	24V DC	32	+24V2	24V DC
7	GND1	0V	33	GND2	0V
8	X4	Input 4	34	X12	Input 12
9	+24V1	24V DC	35	+24V2	24V DC
10	GND1	0V	36	GND2	0V
11	X6	Input 6	37	X14	Input 14
12	+24V1	24V DC	38	+24V2	24V DC
13	GND1	0V	39	GND2	0V

PIN No.	ID	FUNCTION	PIN No.	ID	FUNCTION
14	GND1	0V	40	GND2	0V
15	X1	Input 1	41	X9	Input 9
16	+24V1	24V DC	42	+24V2	24V DC
17	GND1	0V	43	GND2	0V
18	X3	Input 3	44	X11	Input 11
19	+24V1	24V DC	45	+24V2	24V DC
20	GND1	0V	46	GND2	0V
21	X5	Input 5	47	X13	Input 13
22	+24V1	24V DC	48	+24V2	24V DC
23	GND1	0V	49	GND2	0V
24	X7	Input 7	50	X15	Input 15
25	+24V1	24V DC	51	+24V2	24V DC
26	GND1	0V	52	GND2	0V

MG CO., LTD.
www.mgco.jp

■ POWER SUPPLY TERMINAL ASSIGNMENT

Applicable connector: TFMC1,5 / 5–STF–3,5(Phoenix Contact)
(included in the package)
Applicable wire size: 0.2 – 1.5 mm^2; stripped length 10 mm
Recommended solderless terminal
- AI0,25-10YE 0.25 mm^2 (Phoenix Contact)
- AI0,34-10TQ 0.34 mm^2 (Phoenix Contact)
- AI0,5-10WH 0.5 mm^2 (Phoenix Contact)
- AI0,75-10GY 0.75 mm^2 (Phoenix Contact)
- A1-10 1.0 mm^2 (Phoenix Contact)
- A1,5-10 1.5 mm^2 (Phoenix Contact)

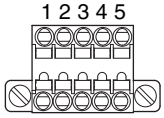

1. FE	Functional Earth
2. NC	—
3. NC	—
4. +24V	Power Input (24V DC)
5. 0V	Power Input (0V)

I/O DATA DESCRIPTIONS

■ DISCRETE INPUT

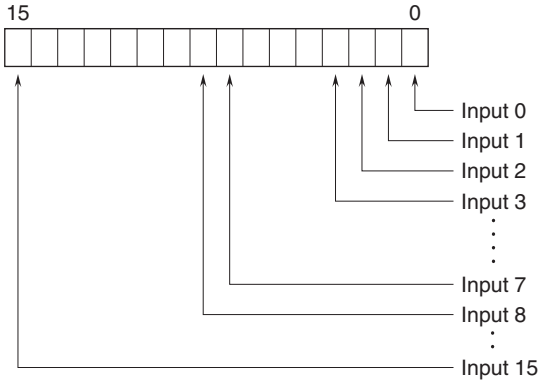

0: OFF 1: ON

EXTERNAL DIMENSIONS & TERMINAL ASSIGNMENTS unit: mm [inch]

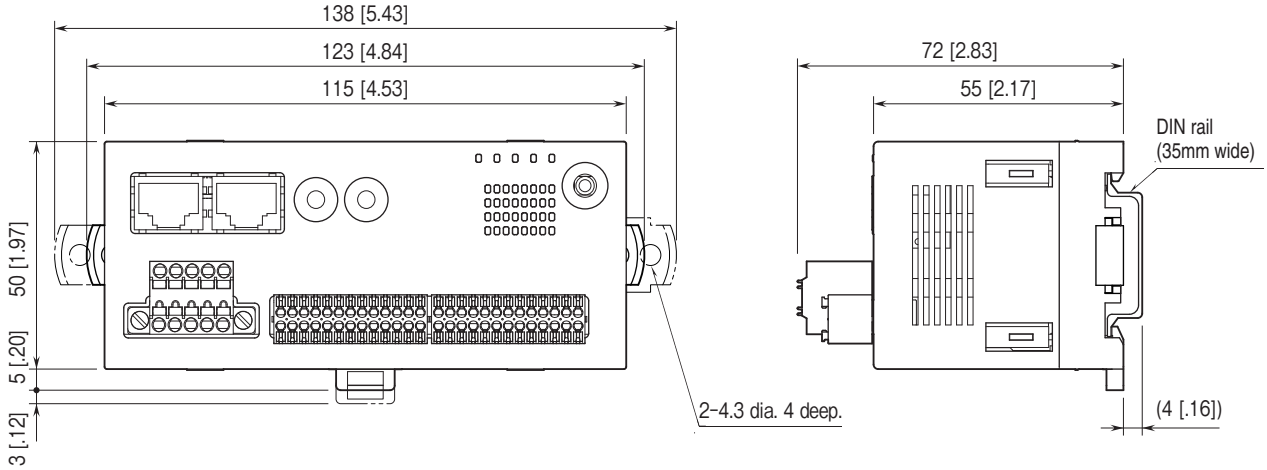

MG CO., LTD.
www.mgco.jp

MOUNTING REQUIREMENTS unit: mm [inch]

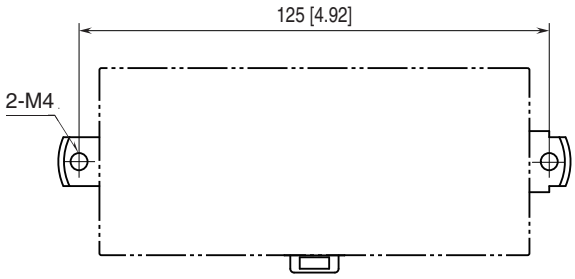

SCHEMATIC CIRCUITRY & CONNECTION DIAGRAM

Note: In order to improve EMC performance, bond the FE terminal to ground.
Caution: FE terminal is NOT a protective conductor terminal.

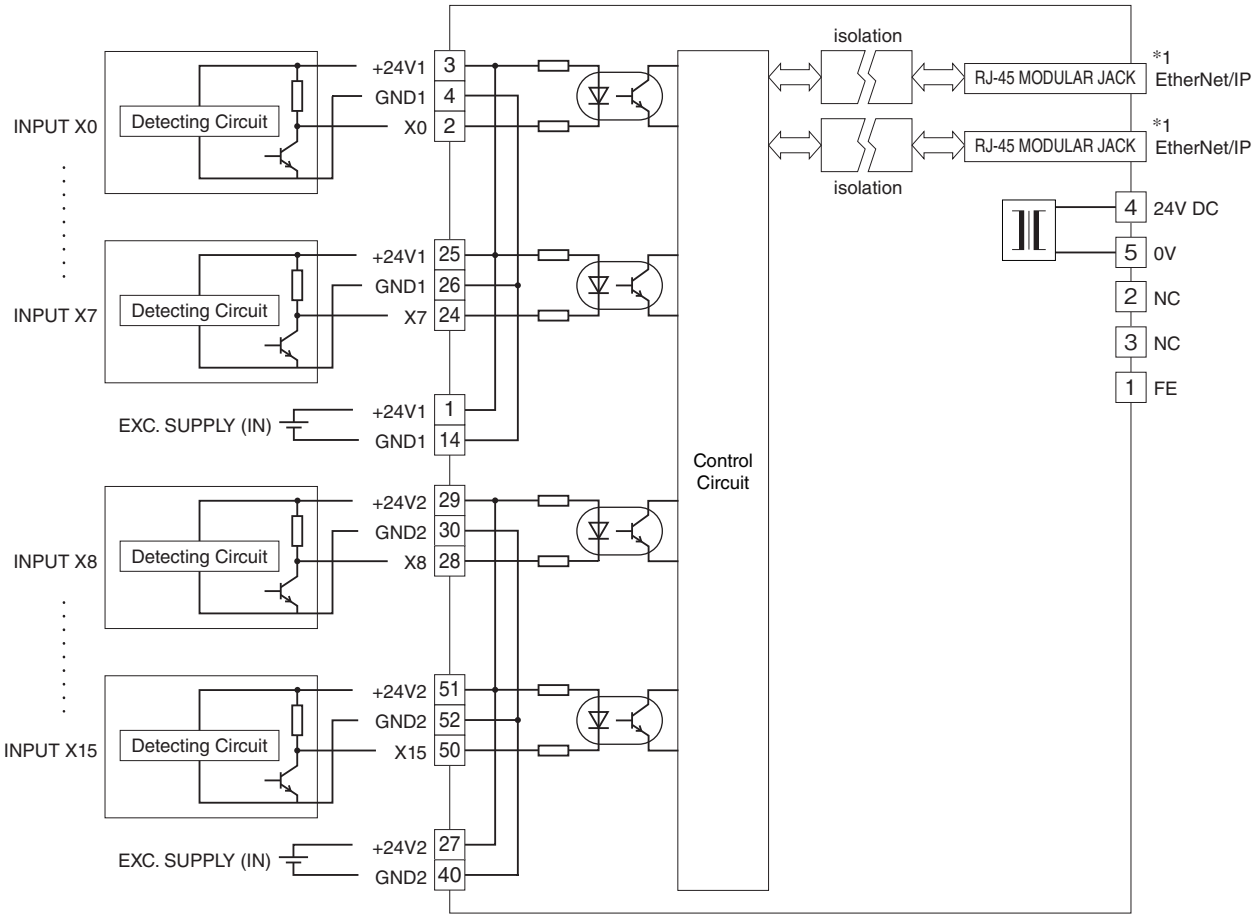

*1. The network cable can be connected to either one.

⚠ Specifications are subject to change without notice.

MG CO., LTD.
www.mgco.jp