## Remote I/O R7F4HEIP Series

## EtherNet/IP I/O MODULE

(NPN discrete input, PNP transistor output, 8 points each, tension clamp terminal block)

Functions & Features

- 8 points NPN discrete input, 8 points PNP transistor output module for EtherNet/IP
- Supports DLR (Device Level Ring) to form a ring topology

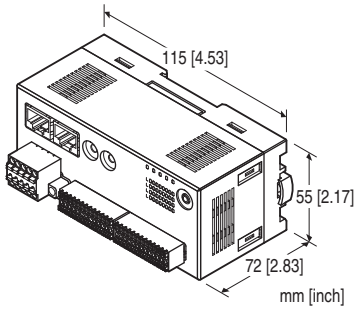


## MODEL: R7F4HEIP-DAC16B-4-R[1]

## ORDERING INFORMATION

- Code number: R7F4HEIP-DAC16B-4-R[1]

Specify a code from below for [1].
(e.g. R7F4HEIP-DAC16B-4-R/Q)

- Specify the specification for option code /Q
(e.g. /C01)

## I/O TYPE

DAC16B: NPN discrete input &
PNP transistor output, 8 points each

## TERMINAL BLOCK: 4

Tension clamp terminal block for power supply
RJ-45 Modular jack for communication
Tension clamp terminal block for I/O

## POWER INPUT

**DC power**

R: 24 V DC
(Operational voltage range: ±10 %; ripple 10 %p-p max.)

## [1] OPTIONS

blank: none
/Q: With options (specify the specification)

## SPECIFICATIONS OF OPTION: Q

**COATING (For the detail, refer to our web site.)**

/C01: Silicone coating
/C02: Polyurethane coating
/C03: Rubber coating

## RELATED PRODUCTS

- PC configurator software (model: R7CFG)
- EDS file

The EDS file and configurator software are downloadable at our web site.
A dedicated cable is required to connect the module to the PC. Please refer to the internet software download site or the users manual for the PC configurator for applicable cable types.

## GENERAL SPECIFICATIONS

Connection
EtherNet/IP: RJ-45 Modular Jack
Power supply, exc. supply, I/O: Tension clamp terminal
Housing material: Flame-resistant resin (gray)
Isolation: Input or exc. supply to output or exc. supply to EtherNet/IP or FE to power
Output at the loss of communication: Configurable via R7CFG
Status indicator LED: PWR, LNK1, LNK2
(Refer to the instruction manual)
Discrete I/O status indicator LED: Green LED turns on with I/O ON
Read rate: Selectable with R7CFG

## EtherNet/IP COMMUNICATION

Communication Standard: IEEE 802.3u
Transmission: 10BASE-T, 100BASE-TX
Baud rate: 10/100 Mbps (Auto Negotiation function)
Protocol: EtherNet/IP
Max. number of socket connections: 3
Connection type: Exclusive owner / Listen only / Input only
Transmission media: 10BASE-T (STP, Category 5), 100BASE-TX (STP, Category 5e)
Network topology: Line, star and ring
Max. length of fieldbus segment: 100 meters
IP address: 192.168.0.250 (factory setting);
Only host address in IP address is configurable via rotary switches, the other items via PC configurator software (model: R7CFG).
DLR supported
Port No.: 2222, 44818
I/O data size: One (1) word
Status indicator LEDs: MS, NS (Refer to the instruction manual for details)



MG CO., LTD.
www.mgco.jp

## INPUT SPECIFICATIONS

**Common**: Positive common (NPN), 8 points per common
**Numbers of input**: 8 points
**Maximum inputs applicable at once:** No limit (at 24 V DC)
**Rated input voltage**: 24 V DC ±10 %; ripple 5 %p-p max.
**ON voltage / current**: ≥ 15 V DC (X0 to X7 input teriminal – +24 V) / ≥ 3.5 mA
**OFF voltage / current**: ≤ 5 V DC (X0 to X7 input teriminal – +24 V) / ≤ 1.0 mA
**Input current**: ≤ 5.5 mA per point at 24 V DC
**Input resistance**: Approx. 4.4 kΩ
**ON delay**: ≤ 0.2 msec.
**OFF delay**: ≤ 0.5 msec.

## OUTPUT SPECIFICATIONS

**Common**: Positive common (PNP) per 8 points
**Number of output**: 8 points
**Maximum outputs applicable at once**: No limit (at 24 V DC)
**Rated load voltage**: 24 V DC ±10 %, ripple 5 %p-p max.
**Rated output current**: 0.1 A per point, 0.8 A per common
**Residual voltage**: ≤ 1.2 V
**Leakage current**: ≤ 0.1 mA
**ON delay**: ≤ 0.2 msec.
**OFF delay**: ≤ 0.5 msec.
**Overload current protection function**: Limits the current value when overcurrent is detected
**Overheat protection function**: Turns OFF the outputs when overheat is detected
(When driving an inductive load, connect a diode in parallel with the load.)

## INSTALLATION

**Current consumption**
•**DC**: Approx. 70 mA
(contact I/O load charge is not included)
**Operating temperature**: -10 to +55°C (14 to 131°F)
**Storage temperature**: -20 to +65°C (-4 to +149°F)
**Operating humidity**: 30 to 90 %RH (non-condensing)
**Atmosphere**: No corrosive gas or heavy dust
**Mounting**: Surface or DIN rail (35 mm rail)
**Weight**: 170 g (0.37 lb)

## PERFORMANCE

**Insulation resistance**: ≥ 100 MΩ with 500 V DC
**Dielectric strength:** 1500 V AC @ 1 minute
(input or exc. supply to output or exc. supply to EtherNet/IP or FE to power)

## STANDARDS & APPROVALS

**EU conformity**:
EMC Directive
EMI EN 61000-6-4
EMS EN 61000-6-2
RoHS Directive

## PC CONFIGURATOR

The following parameters can be set with using PC Configurator Software (model: R7CFG)
Refer to the users manual for the R7CFG for detailed operation of the software program.

**■ CHANNEL BATCH SETTING**

| PARAMETER | SETTING RANGE | DEFAULT |
|---|---|---|
| Conversion rate | 1ms, 5ms, 10ms, 20ms, 50ms, 70ms, 100ms, 200ms | 10ms |
| Output Hold / Clear | Hold / Clear | Hold |

**■ EtherNet SETTING**

| PARAMETER | SETTING RANGE | DEFAULT |
|---|---|---|
| IP Address | 0.0.0.0 - 255.255.255.255 | 192.168.0.250 |
| Subnet Mask | 0.0.0.0 - 255.255.255.255 | 255.255.255.0 |
| Default Gateway | 0.0.0.0 - 255.255.255.255 | 192.168.0.1 |
| TimeOut | 0 - 32767 (0.1 sec.) | 30 (0.1 sec.) |



MG CO., LTD.
www.mgco.jp

## EXTERNAL VIEW

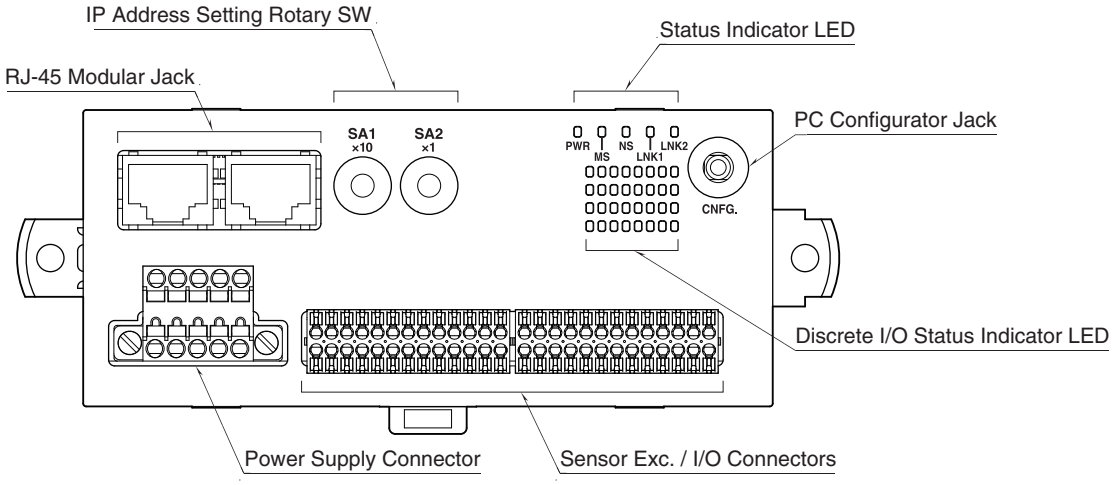


## TERMINAL ASSIGNMENTS

### ■SENSOR EXC. / I/O CONNECTION

Applicable connector: DFMC0,5/13-ST-2,54 (Phoenix Contact) (included in the package)
Applicable wire size: 0.14 – 0.5mm$^2$, stripped length 7mm
Recommended solderless terminal:
· AI0,14-6GY 0.14mm$^2$ (Phoenix Contact)
· AI0,14-8GY 0.14mm$^2$ (Phoenix Contact)
· AI0,25-6YE 0.25mm$^2$ (Phoenix Contact))
· AI0,25-8YE 0.25mm$^2$ (Phoenix Contact)
· AI0,25-7 0.25mm$^2$ (Phoenix Contact)
· AI0,34-7 0.34mm$^2$ (Phoenix Contact)

Note: If the stripped length does not match the length of recommended solderless terminal, adjust to the stripped length of 7mm by cutting the terminal if it is too long, or by extending the wire if the terminal is too short.

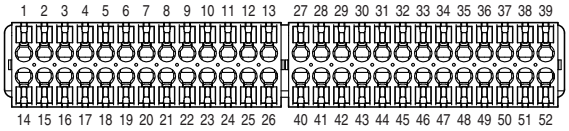


| PIN No. | ID | FUNCTION | PIN No. | ID | FUNCTION |
|---|---|---|---|---|---|
| 1 | +24V1 | 24V DC | 27 | +24V2 | 24V DC |
| 2 | X0 | Input 0 | 28 | Y0 | Output 0 |
| 3 | +24V1 | 24V DC | 29 | +24V2 | 24V DC |
| 4 | GND1 | 0V | 30 | GND2 | 0V |
| 5 | X2 | Input 2 | 31 | Y2 | Output 2 |
| 6 | +24V1 | 24V DC | 32 | +24V2 | 24V DC |
| 7 | GND1 | 0V | 33 | GND2 | 0V |
| 8 | X4 | Input 4 | 34 | Y4 | Output 4 |
| 9 | +24V1 | 24V DC | 35 | +24V2 | 24V DC |
| 10 | GND1 | 0V | 36 | GND2 | 0V |
| 11 | X6 | Input 6 | 37 | Y6 | Output 6 |
| 12 | +24V1 | 24V DC | 38 | +24V2 | 24V DC |
| 13 | GND1 | 0V | 39 | GND2 | 0V |

| PIN No. | ID | FUNCTION | PIN No. | ID | FUNCTION |
|---|---|---|---|---|---|
| 14 | GND1 | 0V | 40 | GND2 | 0V |
| 15 | X1 | Input 1 | 41 | Y1 | Output 1 |
| 16 | +24V1 | 24V DC | 42 | +24V2 | 24V DC |
| 17 | GND1 | 0V | 43 | GND2 | 0V |
| 18 | X3 | Input 3 | 44 | Y3 | Output 3 |
| 19 | +24V1 | 24V DC | 45 | +24V2 | 24V DC |
| 20 | GND1 | 0V | 46 | GND2 | 0V |
| 21 | X5 | Input 5 | 47 | Y5 | Output 5 |
| 22 | +24V1 | 24V DC | 48 | +24V2 | 24V DC |
| 23 | GND1 | 0V | 49 | GND2 | 0V |
| 24 | X7 | Input 7 | 50 | Y7 | Output 7 |
| 25 | +24V1 | 24V DC | 51 | +24V2 | 24V DC |
| 26 | GND1 | 0V | 52 | GND2 | 0V |



MG CO., LTD.
www.mgco.jp

### ■ POWER SUPPLY TERMINAL ASSIGNMENT

Applicable connector: TFMC1,5 / 5–STF–3,5(Phoenix Contact)
(included in the package)
Applicable wire size: 0.2 – 1.5 mm$^2$; stripped length 10 mm
Recommended solderless terminal
- AI0,25-10YE 0.25 mm$^2$ (Phoenix Contact)
- AI0,34-10TQ 0.34 mm$^2$ (Phoenix Contact)
- AI0,5-10WH 0.5 mm$^2$ (Phoenix Contact)
- AI0,75-10GY 0.75 mm$^2$ (Phoenix Contact)
- A1-10 1.0 mm$^2$ (Phoenix Contact)
- A1,5-10 1.5 mm$^2$ (Phoenix Contact)

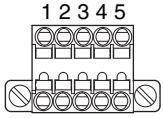


| | |
|---|---|
| 1. FE | Functional Earth |
| 2. NC | — |
| 3. NC | — |
| 4. +24V | Power Input (24V DC) |
| 5. 0V | Power Input (0V) |

## I/O DATA DESCRIPTIONS

### ■ DISCRETE INPUT

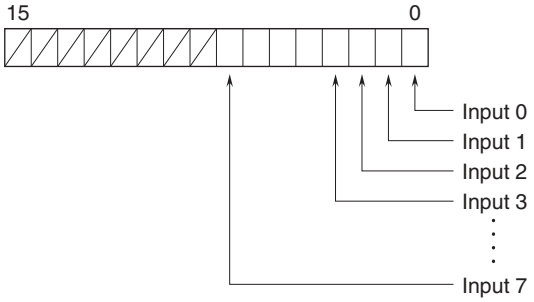


0: OFF 1: ON

### ■ DISCRETE OUTPUT

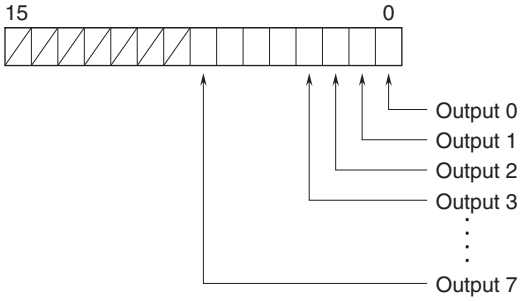


0: OFF 1: ON

## EXTERNAL DIMENSIONS & TERMINAL ASSIGNMENTS unit: mm

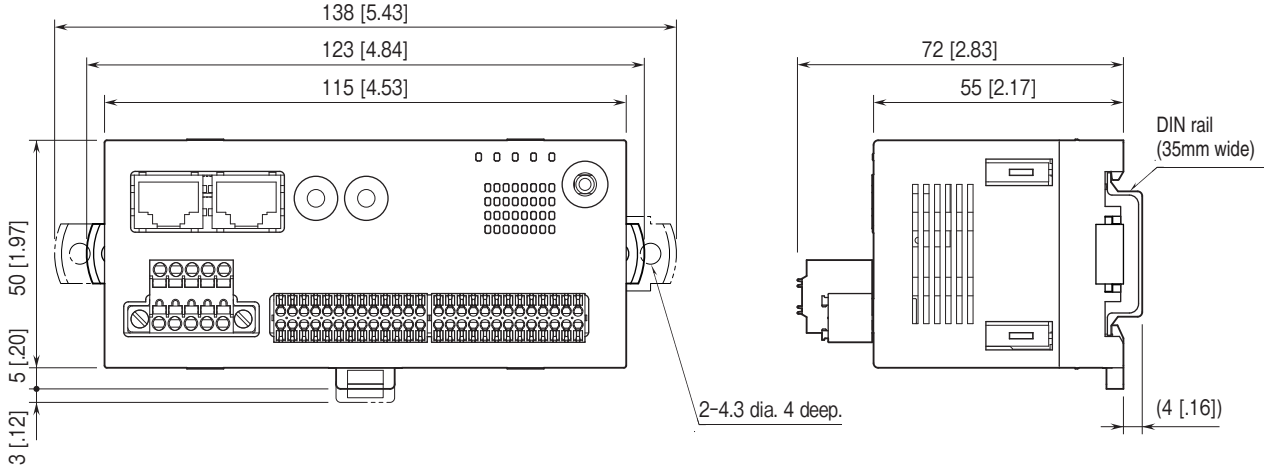




MG CO., LTD.
www.mgco.jp

## MOUNTING REQUIREMENTS unit: mm [inch]

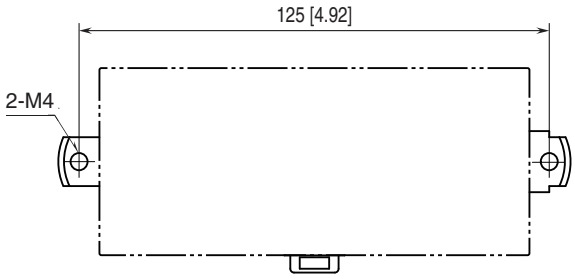


## SCHEMATIC CIRCUITRY & CONNECTION DIAGRAM

Note: In order to improve EMC performance, bond the FE terminal to ground.
Caution: FE terminal is NOT a protective conductor terminal.

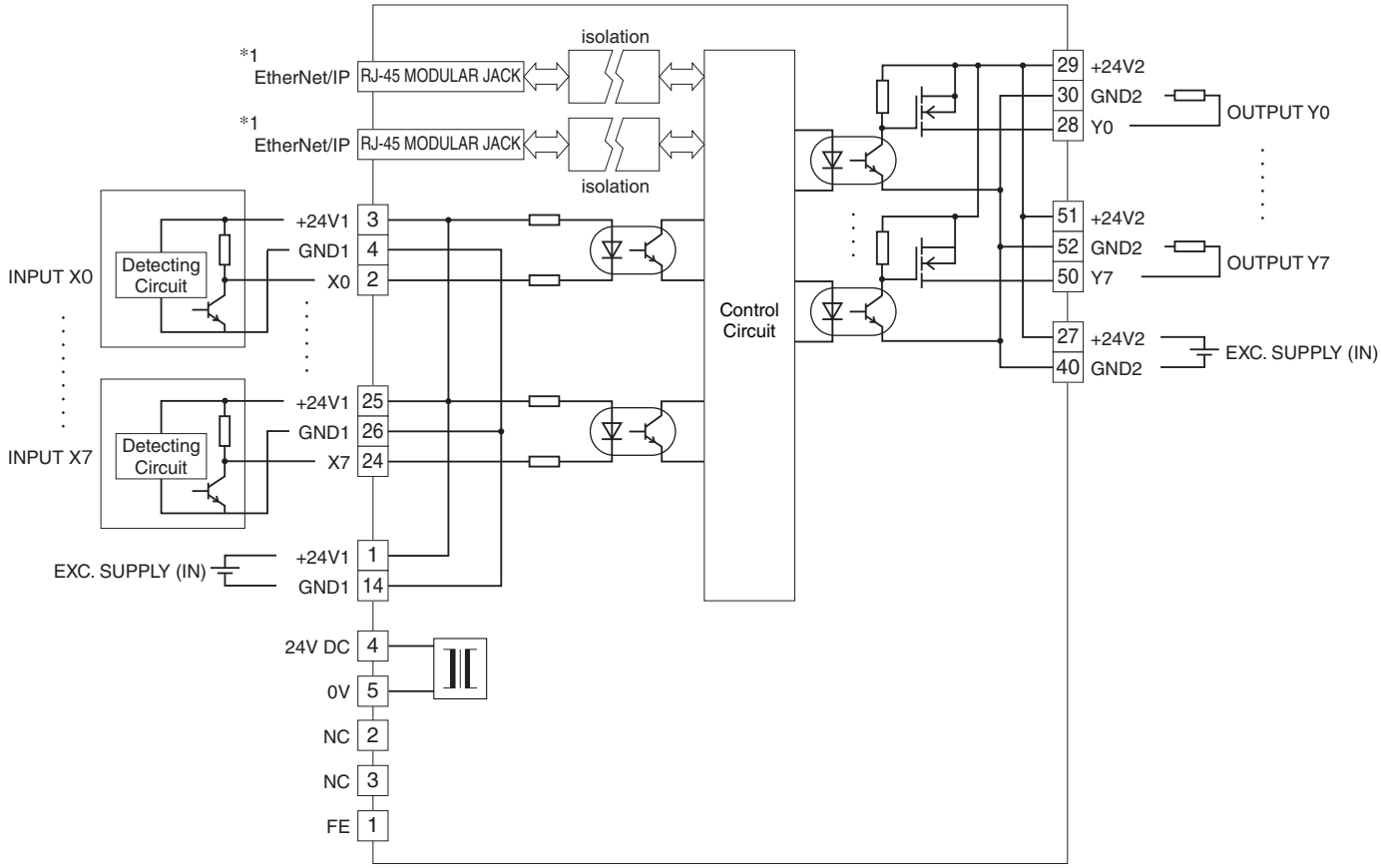


*1. The network cable can be connected to either one.

⚠ Specifications are subject to change without notice.



MG CO., LTD.
www.mgco.jp