Remote I/O R7F4HEIP Series

EtherNet/IP I/O MODULE

(NPN transistor output, 16 points, tension clamp terminal block)

Functions & Features

- 16 points NPN transistor output module for EtherNet/IP
- Supports DLR (Device Level Ring) to form a ring topology

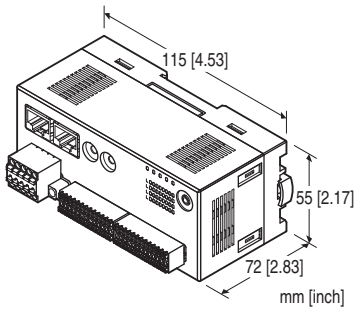

MODEL: R7F4HEIP-DC16A-4-R[1]

ORDERING INFORMATION

- Code number: R7F4HEIP-DC16A-4-R[1]

Specify a code from below for [1].
(e.g. R7F4HEIP-DC16A-4-R/Q)

- Specify the specification for option code /Q
(e.g. /C01)

I/O TYPE

DC16A: NPN transistor output, 16 points

TERMINAL BLOCK: 4

Tension clamp terminal block for power supply
RJ-45 Modular jack for communication
Tension clamp terminal block for I/O

POWER INPUT

DC power
R: 24 V DC
(Operational voltage range: ±10 %; ripple 10 %p-p max.)

[1] OPTIONS

blank: none
/Q: With options (specify the specification)

SPECIFICATIONS OF OPTION: Q

COATING (For the detail, refer to our web site.)
/C01: Silicone coating
/C02: Polyurethane coating
/C03: Rubber coating

RELATED PRODUCTS

- PC configurator software (model: R7CFG)
- EDS file

The EDS file and configurator software are downloadable at our web site.
A dedicated cable is required to connect the module to the PC. Please refer to the internet software download site or the users manual for the PC configurator for applicable cable types.

GENERAL SPECIFICATIONS

Connection
EtherNet/IP: RJ-45 Modular Jack
Power supply, exc. supply, output: Tension clamp terminal
Housing material: Flame-resistant resin (gray)
Isolation: Output or exc. supply to EtherNet/IP or FE to power
Output at the loss of communication: Configurable via R7CFG
Status indicator LED: PWR, LNK1, LNK2
(Refer to the instruction manual)
Discrete output status indicator LED: Green LED turns on with output ON

EtherNet/IP COMMUNICATION

Communication Standard: IEEE 802.3u
Transmission: 10BASE-T, 100BASE-TX
Baud rate: 10/100 Mbps (Auto Negotiation function)
Protocol: EtherNet/IP
Max. number of socket connections: 3
Connection type: Exclusive owner / Listen only / Input only
Transmission media: 10BASE-T (STP, Category 5), 100BASE-TX (STP, Category 5e)
Network topology: Line, star and ring
Max. length of fieldbus segment: 100 meters
IP address: 192.168.0.250 (factory setting);
Only host address in IP address is configurable via rotary switches, the other items via PC configurator software (model: R7CFG).
DLR supported
Port No.: 2222, 44818
I/O data size: One (1) word
Status indicator LEDs: MS, NS (Refer to the instruction manual for details)

MG CO., LTD.
www.mgco.jp

OUTPUT SPECIFICATIONS

Common: Negative common (NPN) per 8 points
Number of output: 16 points
Maximum outputs applicable at once: No limit (at 24 V DC)
Rated load voltage: 24 V DC ±10 %, ripple 5 %p-p max.
Rated output current: 0.1 A per point, 0.8 A per common
Residual voltage: ≤ 1.2 V
Leakage current: ≤ 0.1 mA
ON delay: ≤ 0.2 msec.
OFF delay: ≤ 0.5 msec.
Overload current protection function: Limits the current value when overcurrent is detected
Overheat protection function: Turns OFF the outputs when overheat is detected
(When driving an inductive load, connect a diode in parallel with the load.)

INSTALLATION

Current consumption
•**DC**: Approx. 70 mA
(contact I/O load charge is not included)
Operating temperature: -10 to +55°C (14 to 131°F)
Storage temperature: -20 to +65°C (-4 to +149°F)
Operating humidity: 30 to 90 %RH (non-condensing)
Atmosphere: No corrosive gas or heavy dust
Mounting: Surface or DIN rail (35 mm rail)
Weight: 170 g (0.37 lb)

PERFORMANCE

Insulation resistance: ≥ 100 MΩ with 500 V DC
Dielectric strength: 1500 V AC @ 1 minute
(output or exc. supply to EtherNet/IP or FE to power)

STANDARDS & APPROVALS

EU conformity:
EMC Directive
EMI EN 61000-6-4
EMS EN 61000-6-2
RoHS Directive

PC CONFIGURATOR

The following parameters can be set with using PC Configurator Software (model: R7CFG)
Refer to the users manual for the R7CFG for detailed operation of the software program.

■ CHANNEL BATCH SETTING

PARAMETER	SETTING RANGE	DEFAULT
Output Hold / Clear	Hold / Clear	Hold

■ EtherNet SETTING

PARAMETER	SETTING RANGE	DEFAULT
IP Address	0.0.0.0 - 255.255.255.255	192.168.0.250
Subnet Mask	0.0.0.0 - 255.255.255.255	255.255.255.0
Default Gateway	0.0.0.0 - 255.255.255.255	192.168.0.1
TimeOut	0 - 32767 (0.1 sec.)	30 (0.1 sec.)

MG CO., LTD.
www.mgco.jp

EXTERNAL VIEW

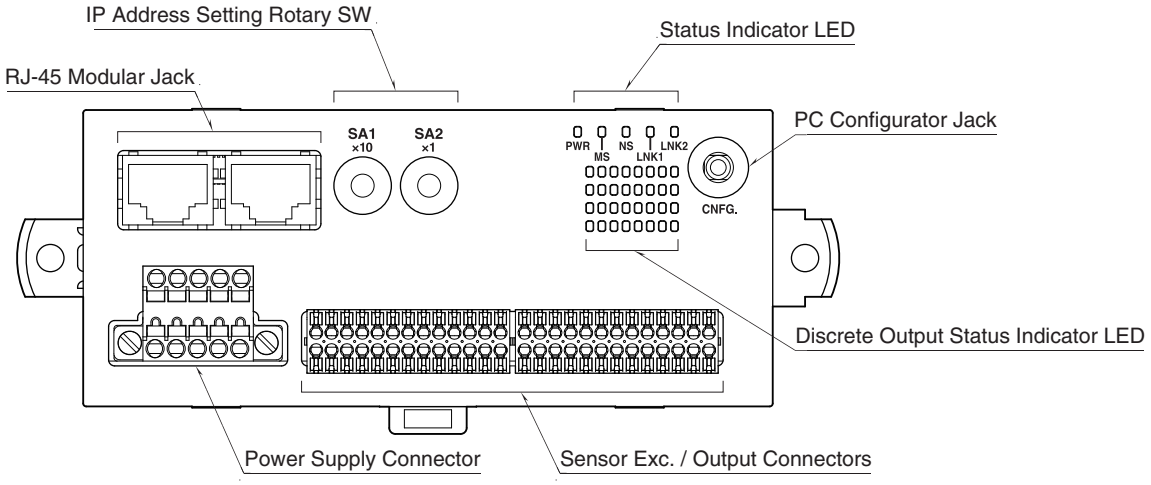

TERMINAL ASSIGNMENTS

■SENSOR EXC. / OUTPUT CONNECTION

Applicable connector: DFMC0,5/13-ST-2,54 (Phoenix Contact) (included in the package)
Applicable wire size: 0.14 – 0.5mm^2, stripped length 7mm
Recommended solderless terminal:
· AI0,14-6GY 0.14mm^2 (Phoenix Contact)
· AI0,14-8GY 0.14mm^2 (Phoenix Contact)
· AI0,25-6YE 0.25mm^2 (Phoenix Contact))
· AI0,25-8YE 0.25mm^2 (Phoenix Contact)
· AI0,25-7 0.25mm^2 (Phoenix Contact)
· AI0,34-7 0.34mm^2 (Phoenix Contact)

Note: If the stripped length does not match the length of recommended solderless terminal, adjust to the stripped length of 7mm by cutting the terminal if it is too long, or by extending the wire if the terminal is too short.

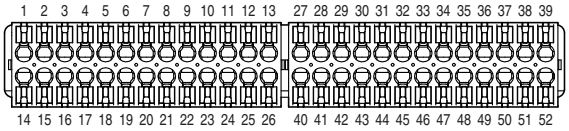

PIN No.	ID	FUNCTION	PIN No.	ID	FUNCTION
1	+24V1	24V DC	27	+24V2	24V DC
2	Y0	Output 0	28	Y8	Output 8
3	+24V1	24V DC	29	+24V2	24V DC
4	GND1	0V	30	GND2	0V
5	Y2	Output 2	31	Y10	Output 10
6	+24V1	24V DC	32	+24V2	24V DC
7	GND1	0V	33	GND2	0V
8	Y4	Output 4	34	Y12	Output 12
9	+24V1	24V DC	35	+24V2	24V DC
10	GND1	0V	36	GND2	0V
11	Y6	Output 6	37	Y14	Output 14
12	+24V1	24V DC	38	+24V2	24V DC
13	GND1	0V	39	GND2	0V

PIN No.	ID	FUNCTION	PIN No.	ID	FUNCTION
14	GND1	0V	40	GND2	0V
15	Y1	Output 1	41	Y9	Output 9
16	+24V1	24V DC	42	+24V2	24V DC
17	GND1	0V	43	GND2	0V
18	Y3	Output 3	44	Y11	Output 11
19	+24V1	24V DC	45	+24V2	24V DC
20	GND1	0V	46	GND2	0V
21	Y5	Output 5	47	Y13	Output 13
22	+24V1	24V DC	48	+24V2	24V DC
23	GND1	0V	49	GND2	0V
24	Y7	Output 7	50	Y15	Output 15
25	+24V1	24V DC	51	+24V2	24V DC
26	GND1	0V	52	GND2	0V

MG CO., LTD.
www.mgco.jp

■ POWER SUPPLY TERMINAL ASSIGNMENT

Applicable connector: TFMC1,5 / 5–STF–3,5(Phoenix Contact)
(included in the package)
Applicable wire size: 0.2 – 1.5 mm^2; stripped length 10 mm
Recommended solderless terminal

- AI0,25-10YE 0.25 mm^2 (Phoenix Contact)
- AI0,34-10TQ 0.34 mm^2 (Phoenix Contact)
- AI0,5-10WH 0.5 mm^2 (Phoenix Contact)
- AI0,75-10GY 0.75 mm^2 (Phoenix Contact)
- A1-10 1.0 mm^2 (Phoenix Contact)
- A1,5-10 1.5 mm^2 (Phoenix Contact)

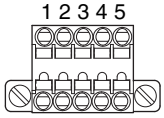

1. FE	Functional Earth
2. NC	—
3. NC	—
4. +24V	Power Input (24V DC)
5. 0V	Power Input (0V)

I/O DATA DESCRIPTIONS

■ DISCRETE OUTPUT

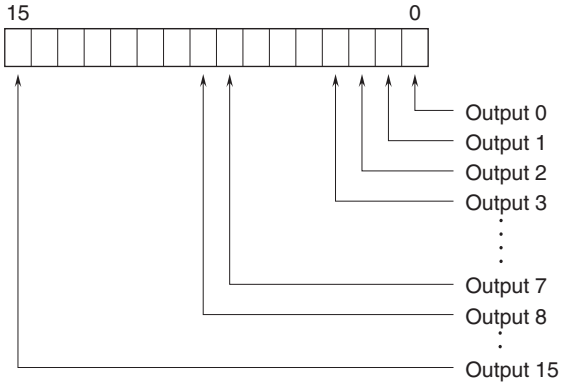

0: OFF 1: ON

EXTERNAL DIMENSIONS & TERMINAL ASSIGNMENTS unit: mm

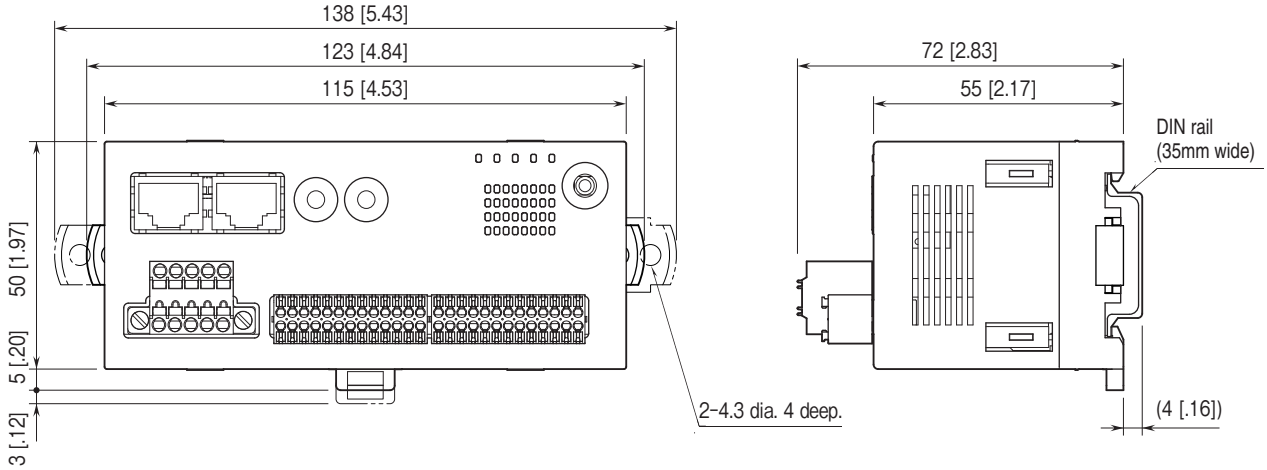

MG CO., LTD.
www.mgco.jp

MOUNTING REQUIREMENTS unit: mm [inch]

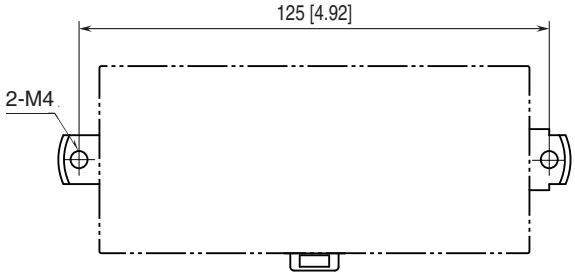

SCHEMATIC CIRCUITRY & CONNECTION DIAGRAM

Note: In order to improve EMC performance, bond the FE terminal to ground.
Caution: FE terminal is NOT a protective conductor terminal.

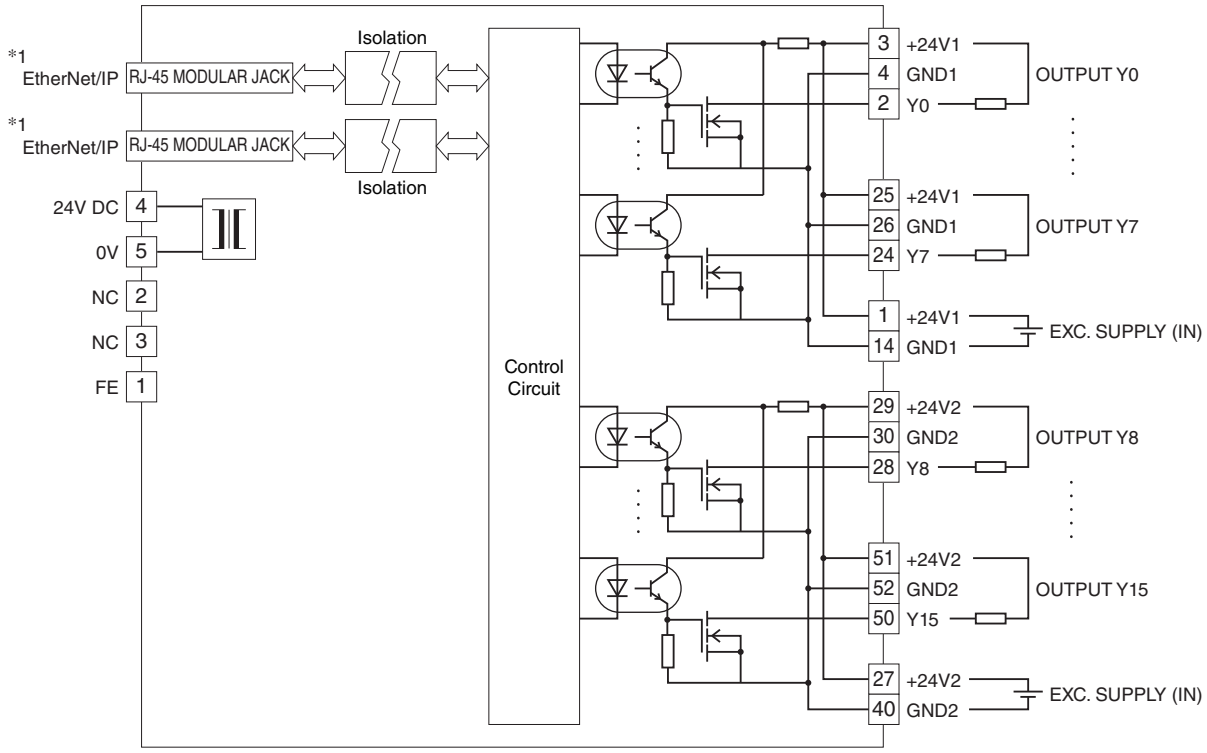

*1. The network cable can be connected to either one

⚠ Specifications are subject to change without notice.

MG CO., LTD.
www.mgco.jp