Remote I/O R7 Series

LonWorks I/O MODULE

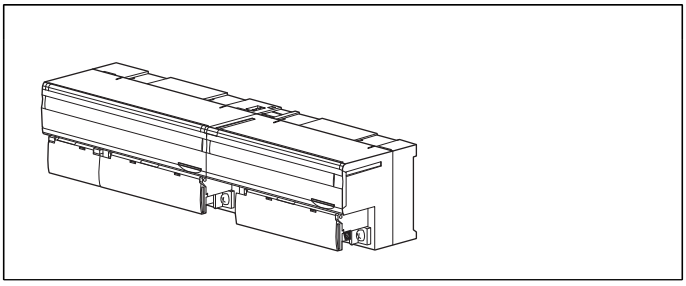

ORDERING INFORMATION

• Basic module: R7L-[1]-AR[2]
Specify a code from below for each of [1] and [2].
(e.g. R7L-DC16A-AR/X2/A/Q)
• Specify the specification for option code /Q
(e.g. /C01)

• Extension module: R7L-[1][2]
Specify a code from below for each of [1] and [2].
(e.g. R7L-EC16A/Q)
• Specify the specification for option code /Q
(e.g. /C01)

MODEL: R7L-[1]-AR[2]

[1] I/O TYPE

DA16: Discrete input, 16 points
DC16A: NPN transistor output, 16 points
(One-shot pulse output is available.)
DC16B: PNP transistor output, 16 points
(One-shot pulse output is available.)
DAC16: PNP discrete input, 8 points
NPN transistor output, 8 points
(One-shot pulse output is available.)
SV4: DC voltage/current input (10 V/20 mA), 4 points
TS4: Thermocouple input, 4 points
RS4: RTD input, 4 points
YV2: DC voltage output, 2 points
YS2: DC current output, 2 points
RR8: Remote control relay control output, 8 points
R7L-DA16 and -DAC16 can accept totalized pulse input with no need of input extension module. Other modules need extension module.

POWER INPUT

Universal
AR: 24 V AC/24 V DC
(Operational voltage range: 24 V AC±10 %,50/60Hz/ 24 V DC±10 %, ripple 10 %p-p max.)

[2] OPTIONS (multiple selections)

Custom specification
(Refer to the custom specification list for difference of specification and combination of code numbers.)
blank: none
/X2: Preset of the counter value
(only for DA16, DAC16, DC16A, DC16B, SV4 and RR8)
◆ DIP SW
/A: with
(Only for DA16, DAC16, DC16A, DC16B, SV4 and RR8 must be specified when DA16, DAC16, DC16A, DC16B, SV4 or RR8 is selected.)
Other Options
blank: none
/Q: With options (specify the specification)

EXTENSION MODULE: R7L–[1][2]

[1] I/O TYPE

EA8: Discrete input, 8 points
EA16: Discrete input, 16 points
EC8A: NPN transistor output, 8 points
EC16A: NPN transistor output, 16 points
EC8B: PNP transistor output, 8 points
EC16B: PNP transistor output, 16 points

[2] OPTIONS

blank: none
/Q: Option other than the above (specify the specification)

SPECIFICATIONS OF OPTION: Q

COATING (For the detail, refer to our web site.)
/C01: Silicone coating
/C02: Polyurethane coating
/C03: Rubber coating

FUNCTIONS & FEATURES

The R7L interfaces analog and discrete I/O signals with a PC via LonWorks.
A ‘basic’ module can be attached with an ‘extension’ module. By combining two modules, single station can handle mixed analog and discrete signals, 32-point discrete inputs, 32-point discrete outputs, 16-point discrete I/Os and other combinations of signals.
Single module can handle multiple Functional Blocks, not only the discrete I/O, but also the pulse count input, one-shot output, scaling, alarm output, and so forth.
Input sensor type (thermocouple, RTD) and range can be

MG CO., LTD.
www.mgco.jp

selected using the LNS Plug-in Software (model: R7LPLG, R7LX2PLG).

RELATED PRODUCTS

• XIF File (Device Interface File)
XIF file is used to define a LonWorks device when programmed on LonMaker.
Be sure to use XIF file with X2 for option code: /X2.
(ex. R7L-DAC16X2v120.XIF)
• LNS Plug-in Software (model: R7LPLG, R7LX2PLG)
XIF files and LNS Plug-in Software are downloadable at our web site.
R7LPLG and R7LX2PLG cannot be installed on the same PC. Install them to the different PC to use.

LonWorks SYSTEM REQUIREMENTS

• LonMaker Turbo Edition Ver.3.2 or higher + LonMaker Turbo Service Pack 4.0 or higher
• LonMark Resource File Ver.13 or higher

GENERAL SPECIFICATIONS

■ Common Specifications
Power input:
24 V AC ±10 % (50 / 60 Hz)
24 V DC ±10 %; ripple 10 %p-p max.
Insulation resistance: ≥ 100 MΩ with 500 V DC
Dielectric strength: 1500 V AC @1 minute
(between isolated circuits)
Operating temperature: -10 to +55°C (14 to 131°F)
Operating humidity: 30 to 90 %RH (non-condensing)
Atmosphere: No corrosive gas or heavy dust
Storage temperature: -20 to +65°C (-4 to +149°F)
Mounting: DIN rail (35 mm wide)
Connection: M3 separable screw terminals
(torque 0.5 N·m)
Screw terminal material: Nickel-plated steel
Solderless terminal: Refer to the drawing at the end of the section.
Recommended manufacturer: Japan Solderless Terminal MFG.Co.Ltd, Nichifu Co.,ltd
Applicable wire size: 0.25 to 1.65 mm^2 (AWG22 to 16)
Housing material: Flame-resistant resin (gray)
Status indicator: PWR, ONLINE, ERR, TX/RX, SVCE
(Refer to the instruction manual for details)
■ Current Consumption & Weight
Current consumption at 24 V AC / 24 V DC
R7L-DA16: 70 mA / 40 mA; 200 g (7.1 oz)
R7L-DC16A: 80 mA / 50 mA; 200 g (7.1 oz)
R7L-DC16B: 80 mA / 50 mA; 200 g (7.1 oz)
R7L-DAC16: 75 mA / 45 mA; 200 g (7.1 oz)
R7L-SV4: 100 mA / 50 mA; 200 g (7.1 oz)
R7L-TS4: 85 mA / 50 mA; 200 g (7.1 oz)
R7L-RS4: 85 mA / 50 mA; 200 g (7.1 oz)
R7L-YV2: 110 mA / 70 mA; 200 g (7.1 oz)
R7L-YS2: 180 mA / 110 mA; 200 g (7.1 oz)
R7L-RR8: 75 mA / 50 mA; 200 g (7.1 oz)
R7L-EA8: 15 mA / 10 mA; 90 g (3.2 oz)
R7L-EA16: 30 mA / 20 mA; 150 g (5.3 oz)
R7L-EC8A: 15 mA / 10 mA; 90 g (3.2 oz)
R7L-EC16A: 30 mA 20 mA; 150 g (5.3 oz)
R7L-EC8B: 15 mA / 10 mA; 90 g (3.2 oz)
R7L-EC16B: 30 mA / 20 mA; 150 g (5.3 oz)
■ **Recommended solderless terminal**

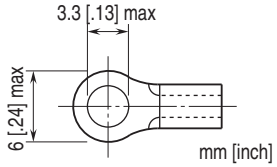

■ I/O Status Indicator
• Discrete I/O
Discrete I/O modules have LED indicators showing I/O signal status.
• Analog I/O
Analog I/O modules have LED indicators showing network variable status assigned to fbLED.
(Refer to the instruction manual for details)
■ Service Switch
Used to identify the node in LonWorks network configuration.
■ Reset Switch
Used to reset the Neuron Chip. Press the switch behind the front cover to reset.
Control functions are halted while completing resetting and restarting. Confirm no danger before conducting resetting.

LonWorks COMMUNICATION

Neuron Chip: FT3120 (NeuronID printed in numeric and bar code [peel-off code 39 format] under the specification marking on the product; two sticker labels attached)
Transceiver: FT-X1 (equivalent to FTT10A)
Transmission speed: 78 kbps
Twisted-pair cable
Distance, free topology: 500 meters
Max. 64 nodes/channel

EXTERNAL VIEW

■ BASIC MODULE

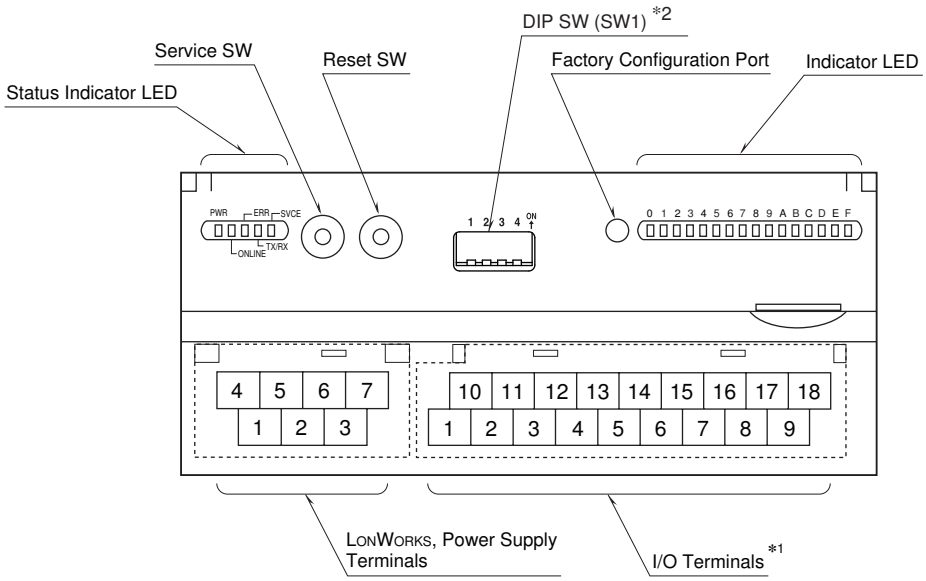

*1. 10 screw terminals for analog output modules.
*2. DIP SW (SW1) is provided when DIP SW /A is selected.

■ EXTENSION MODULE

• DISCRETE, 8 POINTS

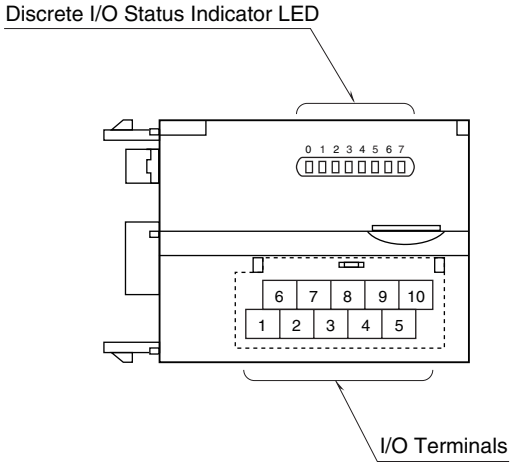

• DISCRETE, 16 POINTS

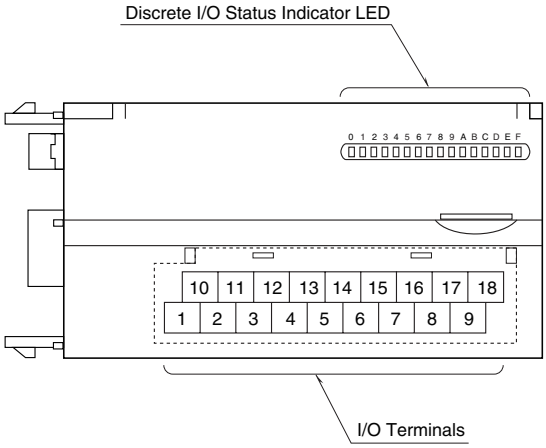

MG CO., LTD.
www.mgco.jp

CONNECTION DIAGRAMS

■ POWER SUPPLY, LONWORKS TERMINAL ASSIGNMENT

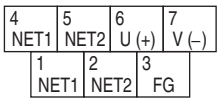

NO.	ID	FUNCTION, NOTES
1	NET1	LONWORKS communication 1
2	NET2	LONWORKS communication 2
3	FG	FG
4	NET1	LONWORKS communication 1
5	NET2	LONWORKS communication 2
6	U (+)	Power input
7	V (–)	Power input

Note: LONWORKS wiring must be paired between NET1 terminals and/or NET2 terminals.

■ HOST PC CONNECTION

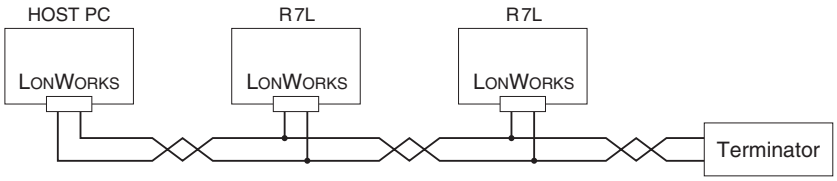

DATA CONVERSION

■ 0 – 100% DATA CONVERSION

Analog input data is converted into digital representations of 0 – 100% proportional to each scaled range. The converted % values are expressed in signed 16 bits.
Overrange input is possible from -15 to +115% of the nominal range. When the signal exceeds the limit, the data is fixed at -15% or +115% respectively.

- Input Range 0 – 5V DC

Input Value	Input %	Converted Data, Decimal
≤ -0.75V	-15%	-15.00
0V	0%	0.00
5V	100%	100.00
≥ 5.75V	115%	115.00

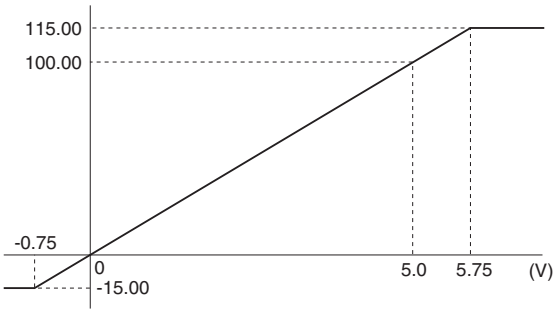

Analog output is converted in the reverse order of the input data. The output range 0 – 5V DC is expressed as 100.00 at 5.0V (100%) and 0.00 at 0V (0%).

MG CO., LTD.
www.mgco.jp

■ TEMPERATURE DATA CONVERSION

Temperature data (thermocouple and RTD) are represented in engineering unit value, °C, expressed in signed 16 bits.

• Input Type K Thermocouple

Input Value	Converted Data, Decimal
≤ -272°C	-272.0
-150°C	-150.0
1370°C	1370.0
≥ 1472°C	1472.0

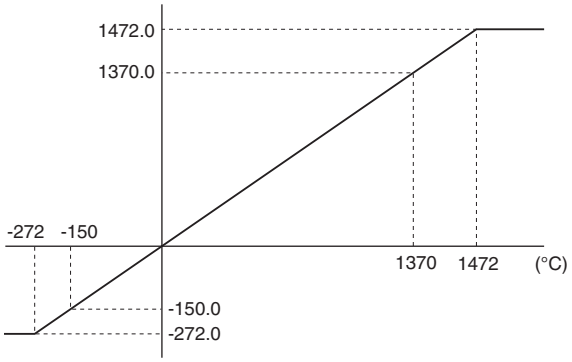

EXTENSION MODULE

A 'basic' module can be attached with one 'extension' module. The extension module is powered from the basic module.
By combining two modules, single station can handle mixed analog and discrete signals.
Settings of the extension module are handled by Functional Blocks of the basic module. Refer to the instruction manual of the basic module for more information.

■ OUTPUT AT THE LOSS OF COMMUNICATION

The extension module is set to 'Hold Output' by factory default setting. The LNS Plug-in Software (model: R7LPLG) is used to change the setting to 'Reset Output.'

■ CONNECTING THE EXTENSION MODULE

1) Remove the extension connector cover located at the side of the basic module.
2) Connect the extension module.

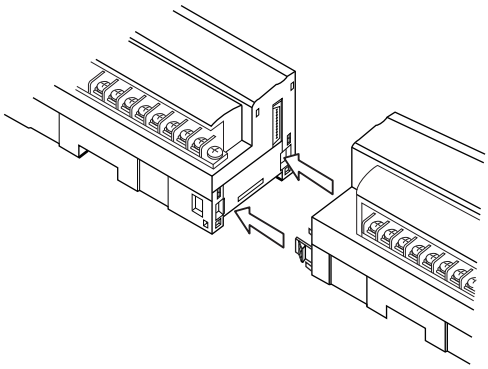

3) Mount the combined module on a DIN rail.

MG CO., LTD.
www.mgco.jp

EXTERNAL DIMENSIONS & TERMINAL ASSIGNMENTS unit: mm [inch]

■ BASIC MODULE

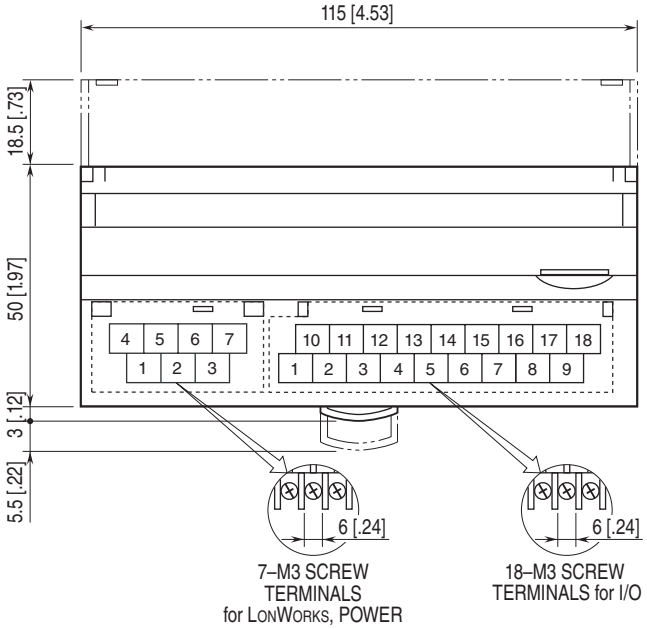

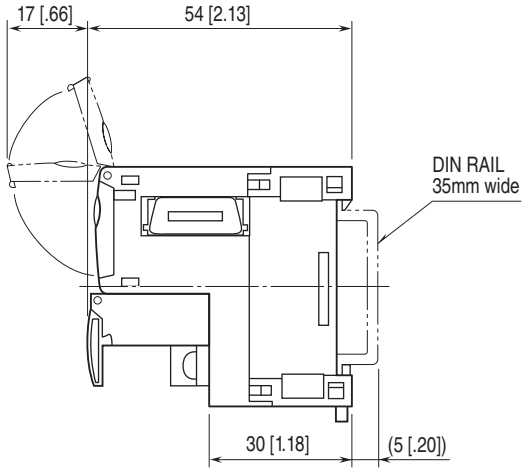

• **R7L-TS4**

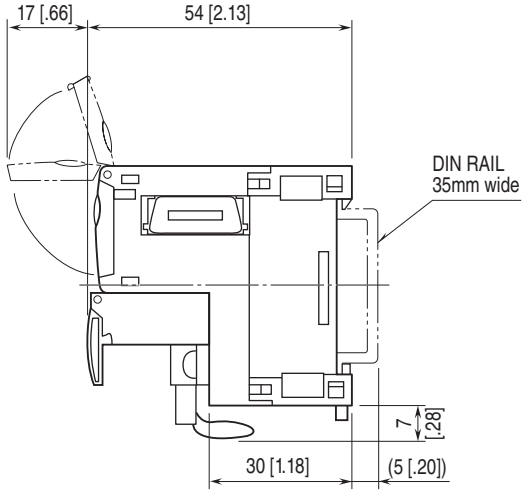

■ ANALOG OUTPUT

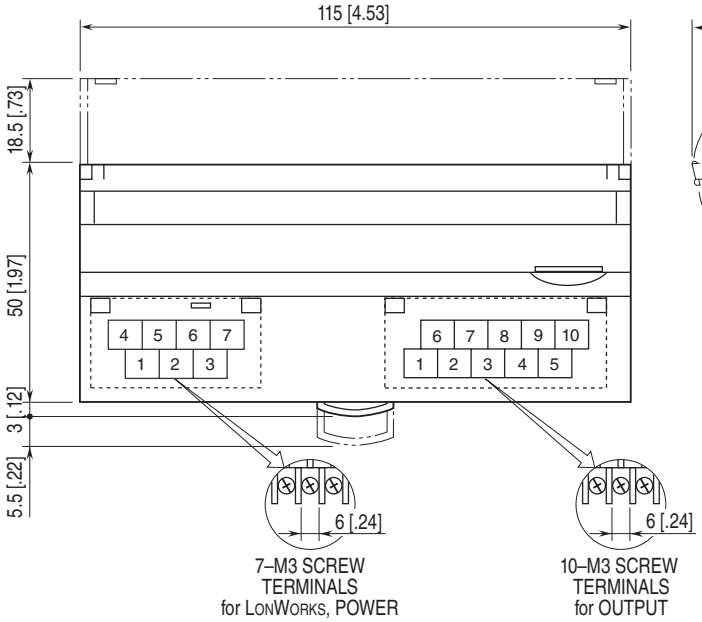

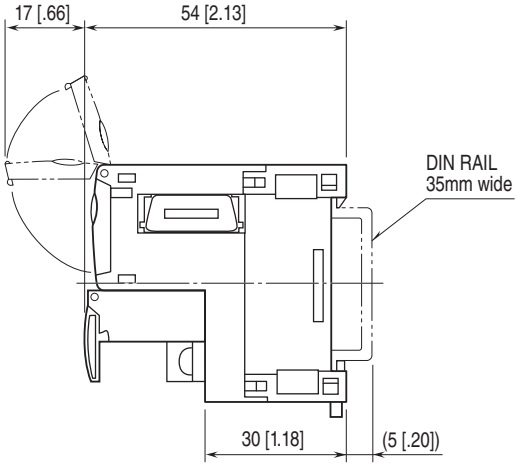

■ **EXTENSION MODULE, 8 POINTS**

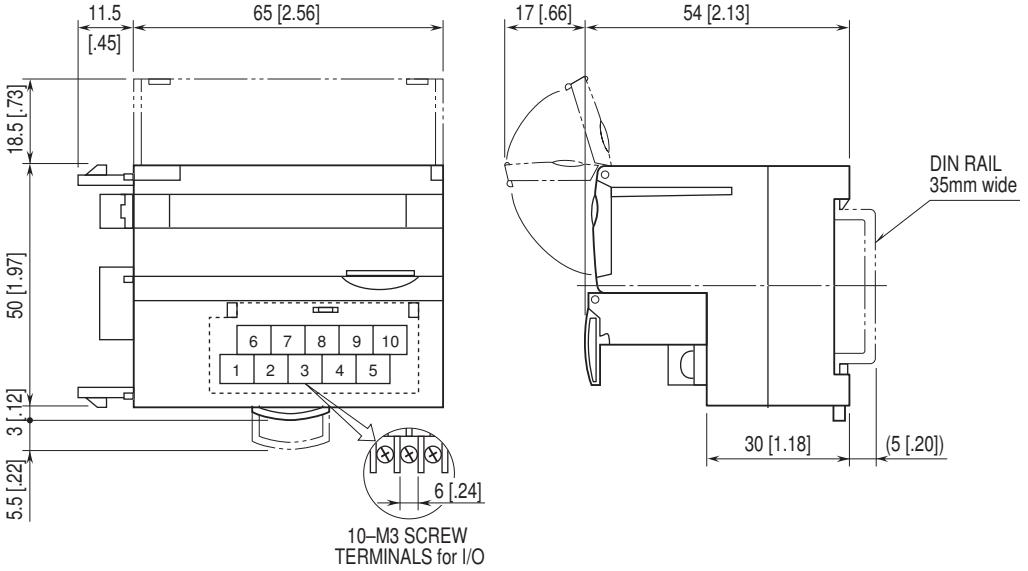

■ **EXTENSION MODULE, 16 POINTS**

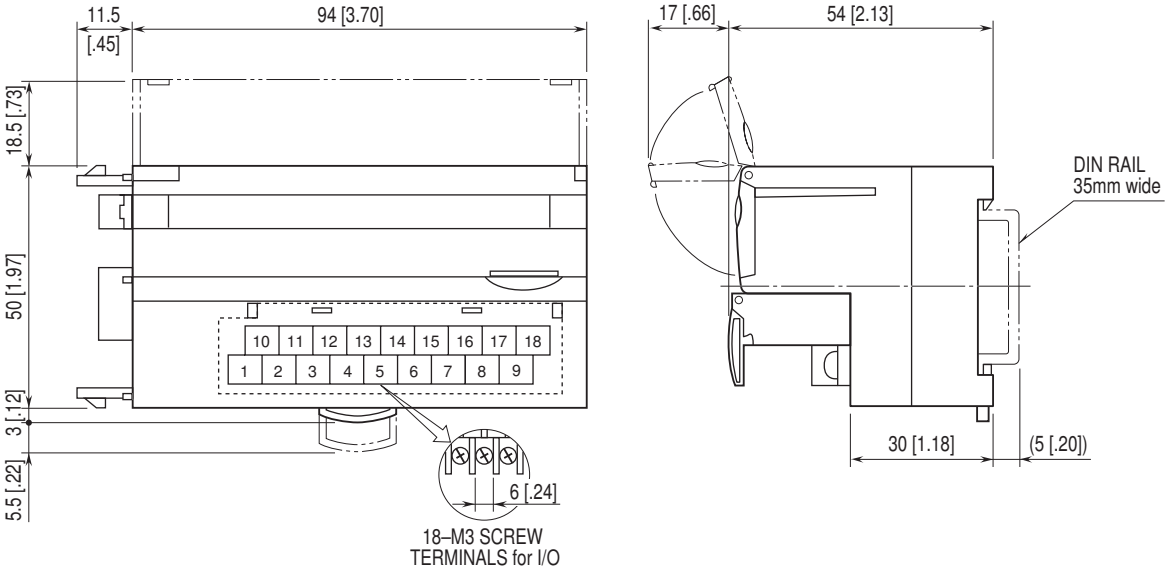

MG CO., LTD.
www.mgco.jp

DISCRETE INPUT MODULE, 16 points

MODEL: R7L-DA16

SPECIFICATIONS

Common: Positive or negative common (NPN/PNP) per 16 points
Number of I/O: Input, 16 points
Maximum inputs applicable at once: No limit (at 24 V DC)
Input status indicator: LED turns ON with contact ON
Isolation: Input to LonWorks or FG or power
Rated input voltage: 24 V DC ±10 %; ripple 5 %p-p max.
ON voltage / current: ≥ 15 V DC (input – COM) / ≥ 3.5 mA
OFF voltage / current: ≤ 5 V DC (input – COM) / ≤ 1 mA
Input current: ≤ 5.5 mA per point at 24 V DC
Input resistance: Approx. 4.4 kΩ
Maximum input frequency: 10 Hz (input terminal)
1 Hz (Network Variable)
Minimum input pulse requirements: 50 msec. (input terminal)
500 msec. (Network Variable)
Accumulated pulse count: 0 – 999 999 999
(Maximum count depends upon Network Variable types)
Overflow: Reset to 0 and restart counting

FUNCTIONAL BLOCKS

The following Functional Blocks are usable. Refer to the instruction manual for detailed information.

- NodeObject (extension module setting)
- fbCNT (totalize pulse count on 8 channels)
- fbDI (discrete input, RS-flip flop)
- fbCMP (compare)
- fbEN (encoder)
- fbTMR (timer)
- fbDOEX (discrete output, extension module)
- fbDIEX (discrete input, extension module)

TERMINAL ASSIGNMENTS

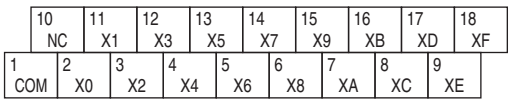

NO.	ID	FUNCTION	NO.	ID	FUNCTION
1	COM	Common	10	NC	No Connection
2	X0	Input 0	11	X1	Input 1
3	X2	Input 2	12	X3	Input 3
4	X4	Input 4	13	X5	Input 5
5	X6	Input 6	14	X7	Input 7
6	X8	Input 8	15	X9	Input 9
7	XA	Input 10	16	XB	Input 11
8	XC	Input 12	17	XD	Input 13
9	XE	Input 14	18	XF	Input 15

CIRCUIT DIAGRAM

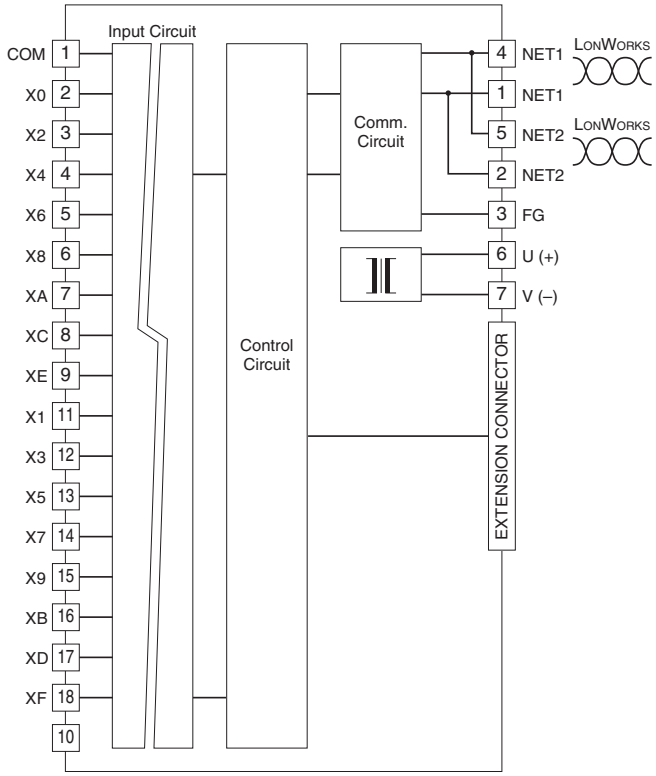

■ **Input Circuit**

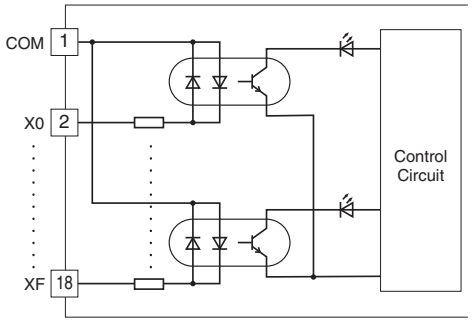

■ **Input Connection Examples**

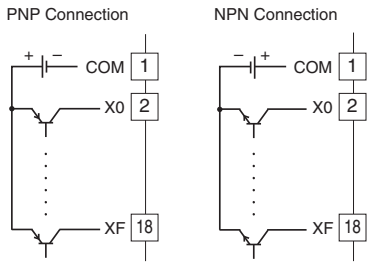

MG CO., LTD.
www.mgco.jp

NPN TRANSISTOR OUTPUT MODULE, 16 points

MODEL: R7L-DC16A

SPECIFICATIONS

Common: Negative common (NPN) per 16 points
Number of I/O: Output, 16 points
Maximum outputs applicable at once: No limit (at 24 V DC)
Output status indicator: LED turns ON with contact ON
Isolation: Output to LonWorks or FG or power
Rated load voltage: 24 V DC ±10 %
Rated output current: 0.25 A per point, 2.0 A per common
Residual voltage: ≤ 1.2 V
Leakage current: ≤ 0.1 mA
(When driving an inductive load, connect a diode in parallel with the load.)

FUNCTIONAL BLOCKS

The following Functional Blocks are usable. Refer to the instruction manual for detailed information.

- NodeObject (extension module setting)
- fbCNT (count)
- fbDO (discrete output, one-shot output)
- fbCMP (compare)
- fbEN (encoder)
- fbTMR (timer)
- fbDOEX (discrete output, extension module)
- fbDIEX (discrete input, extension module)

TERMINAL ASSIGNMENTS

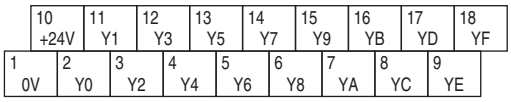

NO.	ID	FUNCTION	NO.	ID	FUNCTION
1	0 V	0 V (common)	10	+24 V	24 V DC
2	Y0	Output 0	11	Y1	Output 1
3	Y2	Output 2	12	Y3	Output 3
4	Y4	Output 4	13	Y5	Output 5
5	Y6	Output 6	14	Y7	Output 7
6	Y8	Output 8	15	Y9	Output 9
7	YA	Output 10	16	YB	Output 11
8	YC	Output 12	17	YD	Output 13
9	YE	Output 14	18	YF	Output 15

CIRCUIT DIAGRAM

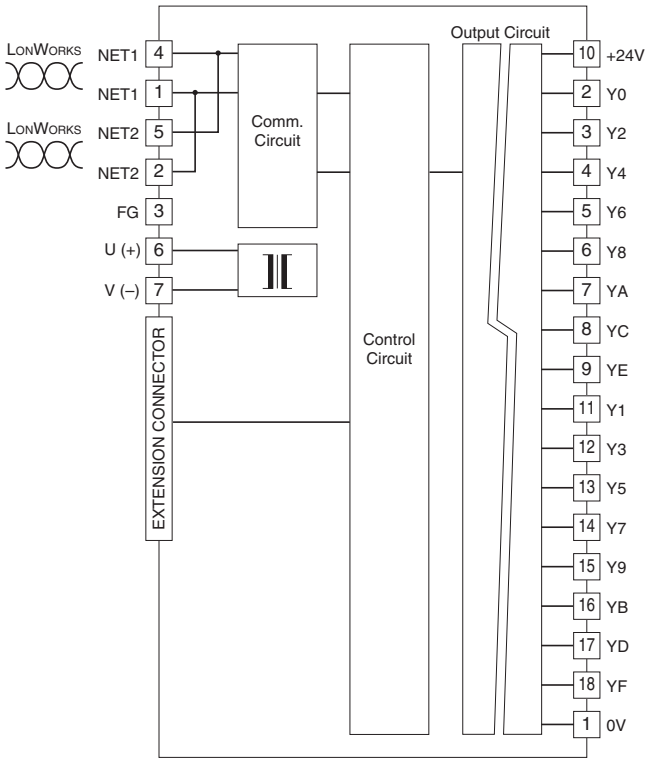

■ **Output Circuit**

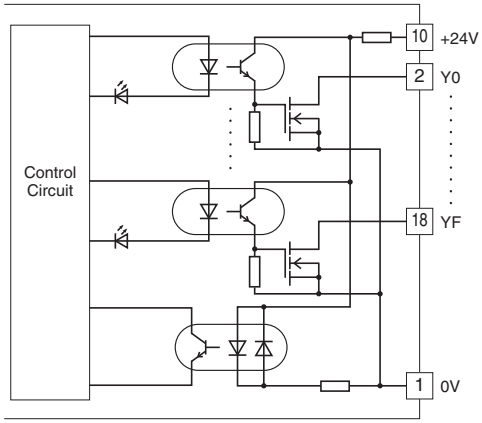

■ **Output Connection Example**

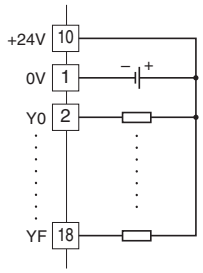

MG CO., LTD.
www.mgco.jp

PNP TRANSISTOR OUTPUT MODULE, 16 points

MODEL: R7L-DC16B

SPECIFICATIONS

Common: Positive common (PNP) per 16 points
Number of I/O: Output, 16 points
Maximum outputs applicable at once: No limit (at 24 V DC)
Output status indicator: LED turns ON with contact ON
Isolation: Output to LonWorks or FG or power
Rated load voltage: 24 V DC ±10 %
Rated output current: 0.25 A per point, 2.0 A per common
Residual voltage: ≤ 1.2 V
Leakage current: ≤ 0.1 mA
(When driving an inductive load, connect a diode in parallel with the load.)

FUNCTIONAL BLOCKS

The following Functional Blocks are usable. Refer to the instruction manual for detailed information.

- NodeObject (extension module setting)
- fbCNT (count)
- fbDO (discrete output, one-shot output)
- fbCMP (compare)
- fbEN (encoder)
- fbTMR (timer)
- fbDOEX (discrete output, extension module)
- fbDIEX (discrete input, extension module)

TERMINAL ASSIGNMENTS

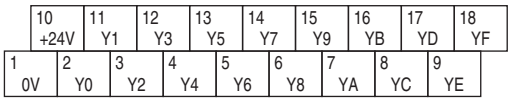

NO.	ID	FUNCTION	NO.	ID	FUNCTION
1	0 V	0 V	10	+24 V	24 V DC (common)
2	Y0	Output 0	11	Y1	Output 1
3	Y2	Output 2	12	Y3	Output 3
4	Y4	Output 4	13	Y5	Output 5
5	Y6	Output 6	14	Y7	Output 7
6	Y8	Output 8	15	Y9	Output 9
7	YA	Output 10	16	YB	Output 11
8	YC	Output 12	17	YD	Output 13
9	YE	Output 14	18	YF	Output 15

CIRCUIT DIAGRAM

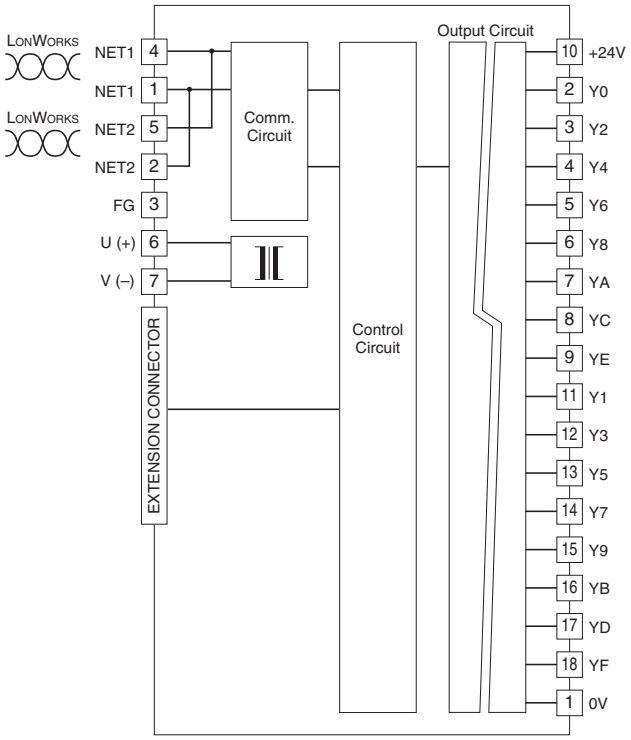

■ **Output Circuit**

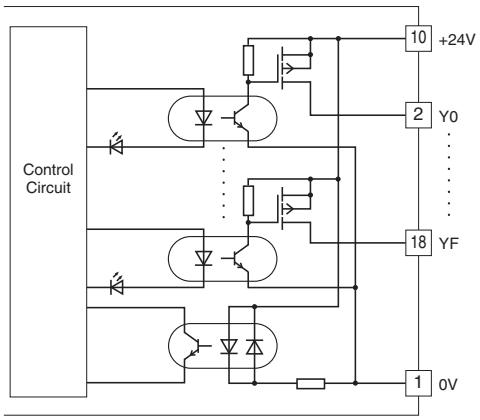

■ **Output Connection Example**

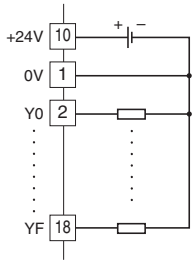

MG CO., LTD.
www.mgco.jp

PNP DISCRETE INPUT &

NPN TRANSISTOR OUTPUT MODULE, 8 points each

MODEL: R7L-DAC16

SPECIFICATIONS

■ COMMON SPECIFICATIONS

Common: Negative common per 16 points
Number of I/O: Input, 8 points; Output, 8 points
Maximum I/O applicable at once: No limit (at 24 V DC)
I/O status indicator: LED turns ON with contact ON
Isolation: Input or output to LonWorks or FG or power

■ INPUT

Rated input voltage: 24 V DC ±10 %; ripple 5 %p-p max.
ON voltage / current: ≥ 15 V DC (input – COM) / ≥ 3.5 mA
OFF voltage / current: ≤ 5 V DC (input – COM) / ≤ 1 mA
Input current: ≤ 5.5 mA per point at 24 V DC
Input resistance: Approx. 4.4 kΩ
Maximum input frequency: 10 Hz (input terminal)
1 Hz (Network Variable)
Minimum input pulse requirements: 50 msec. (input terminal)
500 msec. (Network Variable)
Accumulated pulse count: 0 – 999 999 999
(Maximum count depends upon Network Variable types)
Overflow: Reset to 0 and restart counting

■ OUTPUT

Rated load voltage: 24 V DC ±10 %
Rated output current: 0.25 A per point, 2.0 A per common
Residual voltage: ≤ 1.2 V
Leakage current: ≤ 0.1 mA
(When driving an inductive load, connect a diode in parallel with the load.)

OPERATING MODE SETTING

(*) Factory setting
Note: Be sure to set unused SW 1-3 and 1-4 to OFF.

• Extension (SW1-1, 1-2)

SW1-1	SW1-2	Extension
OFF	OFF	No extension (*)
ON	OFF	Discrete input, 8 or 16 points
OFF	ON	Discrete output, 8 or 16 points

FUNCTIONAL BLOCKS

The following Functional Blocks are usable. Refer to the instruction manual for detailed information.

- NodeObject (extension module setting)
- fbCNT (totalize pulse count on 8 channels)
- fbDO (discrete output, one-shot output)
- fbDI (discrete input, RS-flip flop)
- fbCMP (compare)
- fbEN (encoder)
- fbTMR (timer)
- fbDOEX (discrete output, extension module)
- fbDIEX (discrete input, extension module)

TERMINAL ASSIGNMENTS

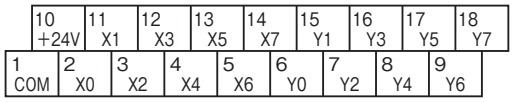

NO.	ID	FUNCTION	NO.	ID	FUNCTION
1	COM	Common	10	+24V	24V DC
2	X0	Input 0	11	X1	Input 1
3	X2	Input 2	12	X3	Input 3
4	X4	Input 4	13	X5	Input 5
5	X6	Input 6	14	X7	Input 7
6	Y0	Output 0	15	Y1	Output 1
7	Y2	Output 2	16	Y3	Output 3
8	Y4	Output 4	17	Y5	Output 5
9	Y6	Output 6	18	Y7	Output 7

MG CO., LTD.
www.mgco.jp

CIRCUIT DIAGRAM

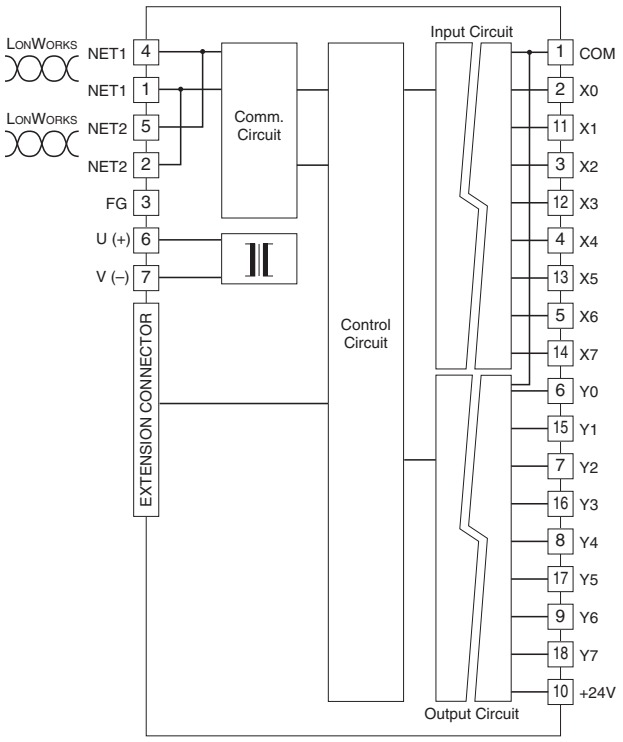

■ **Input Circuit**

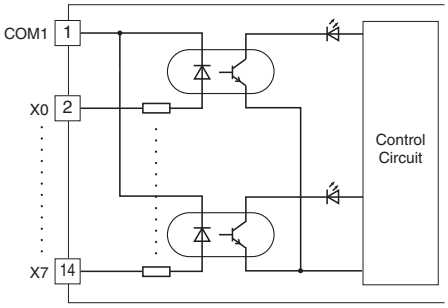

■ **Output Circuit**

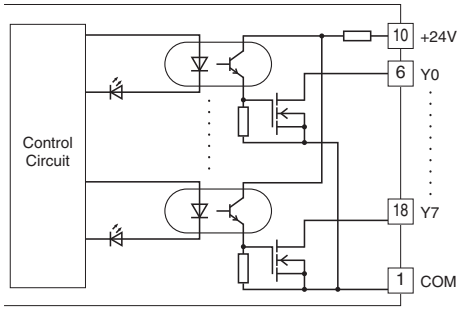

■ **I/O Connection Example**

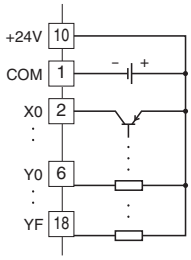

MG CO., LTD.
www.mgco.jp

DC VOLTAGE/CURRENT INPUT MODULE, 4 points

MODEL: R7L-SV4

SPECIFICATIONS

Isolation: Input 0 to input 1 to input 2 to input 3 to power input or LonWorks or FG
Converted data range: 0 – 100.00 of the input range
Linearization: Standard
Input range
Wide span voltage: -10 – +10 V DC(*), -5 – +5 V DC, 0 – 10 V DC, 0 – 5 V DC, 1 – 5 V DC;
(*) Factory setting
Narrow span voltage: -1 – +1 V DC, 0 – 1 V DC, -0.5 – +0.5 V DC, 0 – 0.5 V DC;
Current range: -20 – +20 mA DC, 0 – 20 mA DC, 4 – 20 mA DC
(Input range is selectable using the LNS Plug-in Software (model: R7LPLG))
• Input resistance
Wide span voltage: ≥ 1 MΩ
Narrow span voltage: ≥ 100 kΩ
Current range: 70 Ω
Conversion rate / conversion accuracy: 80 msec. / ±0.1 %
Temperature coefficient: ±0.015 %/°C (±0.008 %/°F)

FUNCTIONAL BLOCKS

The following Functional Blocks are usable. Refer to the instruction manual for detailed information.
• NodeObject (extension module setting)
• fbCNT (count)
• fbSV (DC voltage/current input, input range)
• fbARM (alarm output)
• fbCV (scaling)
• fbLED (LED function)
• fbDOEX (discrete output, extension module)
• fbDIEX (discrete input, extension module)

TERMINAL ASSIGNMENTS

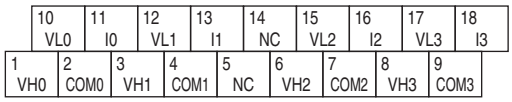

NO.	ID	FUNCTION	NO.	ID	FUNCTION
1	VH0	Wide span volt. 0	10	VL0	Narrow span volt. 0
2	COM0	Common 0	11	I0	Current range 0
3	VH1	Wide span volt. 1	12	VL1	Narrow span volt. 1
4	COM1	Common 1	13	I1	Current range 1
5	NC	No connection	14	NC	No connection
6	VH2	Wide span volt. 2	15	VL2	Narrow span volt. 2
7	COM2	Common 2	16	I2	Current range 2
8	VH3	Wide span volt. 3	17	VL3	Narrow span volt. 3
9	COM3	Common 3	18	I3	Current range 3

CIRCUIT DIAGRAM

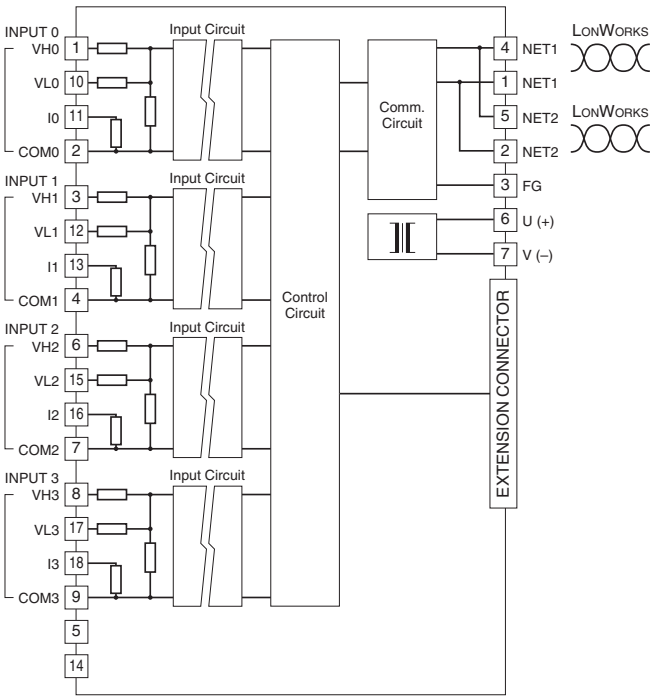

■ **Input Connection Examples**

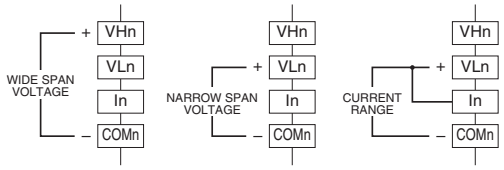

Be sure to close across VLn and In terminals for a current input.

MG CO., LTD.
www.mgco.jp

THERMOCOUPLE INPUT MODULE, 4 points

MODEL: R7L-TS4

SPECIFICATIONS

Isolation: Input 0 to input 1 to input 2 to input 3 to power input or LonWorks or FG
Converted data range: Engineering unit value (°C)
Linearization: Standard
Thermocouple: K(*), E, J, T, B, R, S, C, N, U, L, P, PR
(*) Factory setting
(T/C type is selectable using the LNS Plug-in Software (model: R7LPLG))
Cold junction compensation: CJC sensor attached to the input terminals
Input resistance: ≥ 30 kΩ
Burnout sensing: ≤ 0.1 μA
Conversion accuracy: ±1°C (±1.8°F);
±2.0°C (±3.6°F) for B, R, S, C, PR
Conversion rate: 250 msec.
Temperature coefficient: ±0.015 %/°C (±0.008 %/°F) of max. span
CJC error: ±1.0°C at 25°C ±10°C
(±1.8°F at 77°F ±18°F)
±1.5°C (±2.7°F) for R, S, PR

T/C	BURNOUT INDICATION (°C)		CONFORMANCE RANGE (°C)
	Downscale	Upscale	
K (CA)	-272	+1472	-150 to +1370
E (CRC)	-272	+1120	-170 to +1000
J (IC)	-260	+1300	-180 to +1200
T (CC)	-272	+ 500	-170 to + 400
B (RH)	24	1920	1000 to 1760
R	-100	+1860	380 to 1760
S	-100	+1860	400 to 1760
C (WRe 5-26)	-52	+2416	100 to 2315
N	-272	+1400	-130 to +1300
U	-252	+ 700	-200 to +600
L	-252	+1000	-200 to +900
P (Platinel II)	-52	+1496	0 to 1395
(PR)	-52	+1860	300 to 1760

T/C	BURNOUT INDICATION (°F)		CONFORMANCE RANGE (°F)
	Downscale	Upscale	
K (CA)	-458	+2682	-238 to +2498
E (CRC)	-458	+2048	-274 to +1832
J (IC)	-436	+2372	-292 to +2192
T (CC)	-458	+932	-274 to +752
B (RH)	75	3488	1832 to 3200
R	-148	+3380	716 to 3200
S	-148	+3380	752 to 3200
C (WRe 5-26)	-62	+4381	212 to 4199
N	-458	+2552	-202 to +2372
U	-422	+1292	-328 to +1112
L	-422	+1832	-328 to +1652
P (Platinel II)	-62	+2725	32 to 2543
(PR)	-62	+3380	572 to 3200

FUNCTIONAL BLOCKS

The following Functional Blocks are usable. Refer to the instruction manual for detailed information.

- NodeObject (extension module setting)
- fbCNT (count)
- fbTS (thermocouple input & setting)
- fbARM (alarm output)
- fbCV (scaling)
- fbLED (LED function)
- fbDOEX (discrete output, extension module)
- fbDIEX (discrete input, extension module)

TERMINAL ASSIGNMENTS

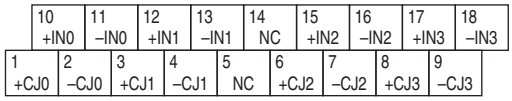

NO.	ID	FUNCTION	NO.	ID	FUNCTION
1	+CJ0	CJC + 0	10	+IN0	T/C + 0
2	–CJ0	CJC – 0	11	–IN0	T/C – 0
3	+CJ1	CJC + 1	12	+IN1	T/C + 1
4	–CJ1	CJC – 1	13	–IN1	T/C – 1
5	NC	No connection	14	NC	No connection
6	+CJ2	CJC + 2	15	+IN2	T/C + 2
7	–CJ2	CJC – 2	16	–IN2	T/C – 2
8	+CJ3	CJC + 3	17	+IN3	T/C + 3
9	–CJ3	CJC – 3	18	–IN3	T/C – 3

MG CO., LTD.
www.mgco.jp

CIRCUIT DIAGRAM

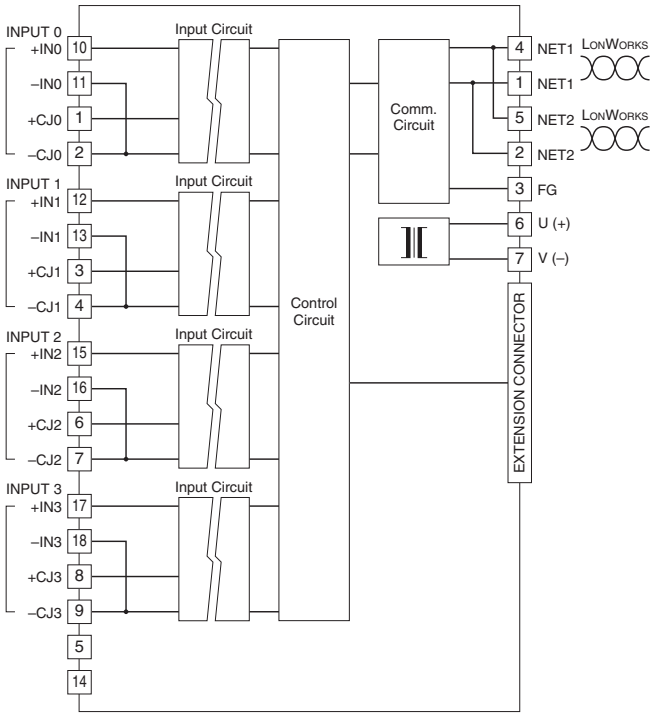

■ **Input Connection Example**

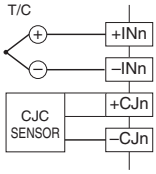

RTD INPUT MODULE, 4 points

MODEL: R7L-RS4

SPECIFICATIONS

Isolation: Input 0 to input 1 to input 2 to input 3 to power input or LonWorks or FG
Converted data range: Engineering unit value (°C)
Linearization: Standard
RTD: Pt 100 (JIS '97, IEC)(*), Pt 100 (JIS '89), JPt 100 (JIS '89), Pt 50 Ω (JIS '81), Ni 100, Cu 10, Cu 50
(*) Factory setting
(RTD type is selectable using the LNS Plug-in Software (model: R7LPLG))
Sensing current: ≤ 1 mA
Input resistance: ≥ 1 MΩ
Maximum leadwire resistance: 100 Ω per wire
Conversion accuracy: ±1°C (±1.8°F); ±3°C (±5.4°F) for Cu 10
Conversion rate: 250 msec.
Temperature coefficient: ±0.015 %/°C (±0.008 %/°F) of max. span

RTD	BURNOUT INDICATION (°C)		CONFORMANCE RANGE (°C)
	Downscale	Upscale	
Pt 100 (JIS '97, IEC)	-240	+900	-200 to +850
Pt 100 (JIS '89)	-240	+900	-200 to +660
JPt 100 (JIS '89)	-236	+560	-200 to +510
Pt 50 Ω (JIS '81)	-236	+700	-200 to +649
Ni 100	-100	+252	-80 to +250
Cu 10 (@25°C)	-212	+312	-50 to +250
Cu 50	-100	+200	-50 to +150

FUNCTIONAL BLOCKS

The following Functional Blocks are usable. Refer to the instruction manual for detailed information.

- NodeObject (extension module setting)
- fbCNT (count)
- fbRS (RTD input & setting)
- fbARM (alarm output)
- fbCV (scaling)
- fbLED (LED function)
- fbDOEX (discrete output, extension module)
- fbDIEX (discrete input, extension module)

TERMINAL ASSIGNMENTS

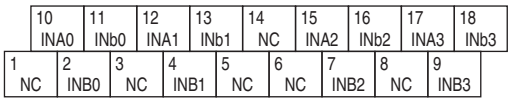

NO.	ID	FUNCTION	NO.	ID	FUNCTION
1	NC	No connection	10	INA0	RTD 0-A
2	INB0	RTD 0-B	11	INb0	RTD 0-b
3	NC	No connection	12	INA1	RTD 1-A
4	INB1	RTD 1-B	13	INb1	RTD 1-b
5	NC	No connection	14	NC	No connection
6	NC	No connection	15	INA2	RTD 2-A
7	INB2	RTD 2-B	16	INb2	RTD 2-b
8	NC	No connection	17	INA3	RTD 3-A
9	INB3	RTD 3-B	18	INb3	RTD 3-b

CIRCUIT DIAGRAM

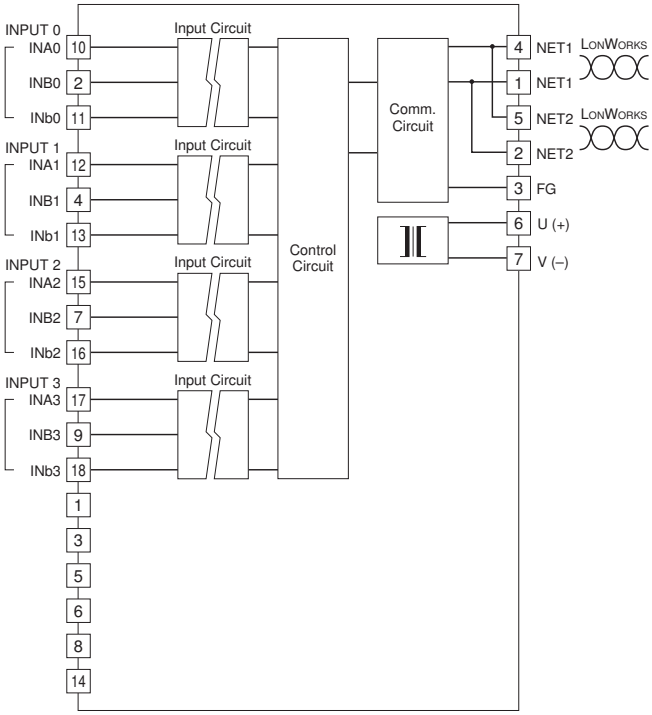

Input Connection Example

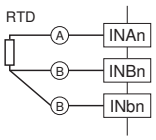

MG CO., LTD.
www.mgco.jp

DC VOLTAGE OUTPUT MODULE, 2 points

MODEL: R7L-YV2

SPECIFICATIONS

Isolation: Output 0 to output 1 to power input or LonWorks or FG
Converted data range: 0 – 100.00 of the output range
Output range
Wide span voltage: -10 – +10 V DC(*), -5 – +5 V DC, 0 – 10 V DC, 0 – 5 V DC, 1 – 5 V DC
(*) Factory setting
Narrow span voltage: -1 – +1 V DC, 0 – 1 V DC, -0.5 – +0.5 V DC, 0 – 0.5 V DC
(Output range is selectable using the LNS Plug-in Software (model: R7LPLG))
Operational range: -15 – +115 % of the output range (except -10 – +10 V DC);
approx. -11.5 – +11.5 V DC (-10 – +10 V DC)
Load resistance: ≥ 100 kΩ
Conversion accuracy: ±0.1 %
Temperature coefficient: ±0.015 %/°C (±0.008 %/°F)

FUNCTIONAL BLOCKS

The following Functional Blocks are usable. Refer to the instruction manual for detailed information.

- NodeObject (extension module setting)
- fbCNT (count)
- fbYV (DC voltage output, output range)
- fbCV (scaling)
- fbLED (LED function)
- fbDOEX (discrete output, extension module)
- fbDIEX (discrete input, extension module)

TERMINAL ASSIGNMENTS

NO.	ID	FUNCTION	NO.	ID	FUNCTION
1	NC	No connection	6	NC	No connection
2	COM0	Common 0	7	VH0	Wide span volt. 0
3	COM0	Common 0	8	VL0	Narrow span volt. 0
4	COM1	Common 1	9	VH1	Wide span volt. 1
5	COM1	Common 1	10	VL1	Narrow span volt. 1

CIRCUIT DIAGRAM

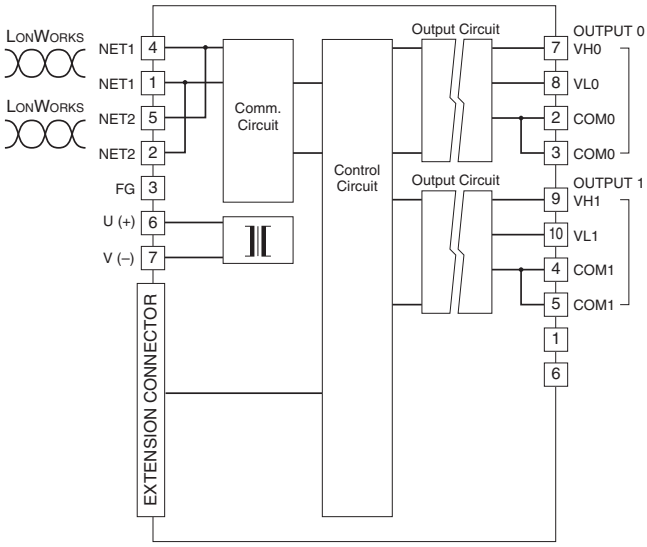

■ **Output Connection Examples**

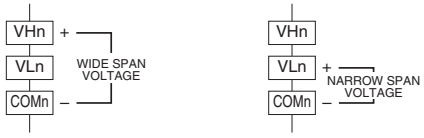

MG CO., LTD.
www.mgco.jp

DC CURRENT OUTPUT MODULE, 2 points

MODEL: R7L-YS2

SPECIFICATIONS

Isolation: Output 0 to output 1 to power input or LonWorks or FG
Converted data range: 0 – 100.00 of the output range
Output range: 4 – 20 mA DC
Load resistance: ≤ 600Ω
Conversion accuracy: ±0.1 %
Temperature coefficient: ±0.015 %/°C (±0.008 %/°F)

FUNCTIONAL BLOCKS

The following Functional Blocks are usable. Refer to the instruction manual for detailed information.

- NodeObject (extension module setting)
- fbCNT (count)
- fbYS (DC current output)
- fbCV (scaling)
- fbLED (LED function)
- fbDOEX (discrete output, extension module)
- fbDIEX (discrete input, extension module)

TERMINAL ASSIGNMENTS

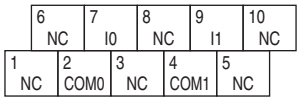

NO.	ID	FUNCTION	NO.	ID	FUNCTION
1	NC	No connection	6	NC	No connection
2	COM0	Common 0	7	I0	Current 0
3	NC	No connection	8	NC	No connection
4	COM1	Common 1	9	I1	Current 1
5	NC	No connection	10	NC	No connection

CIRCUIT DIAGRAM

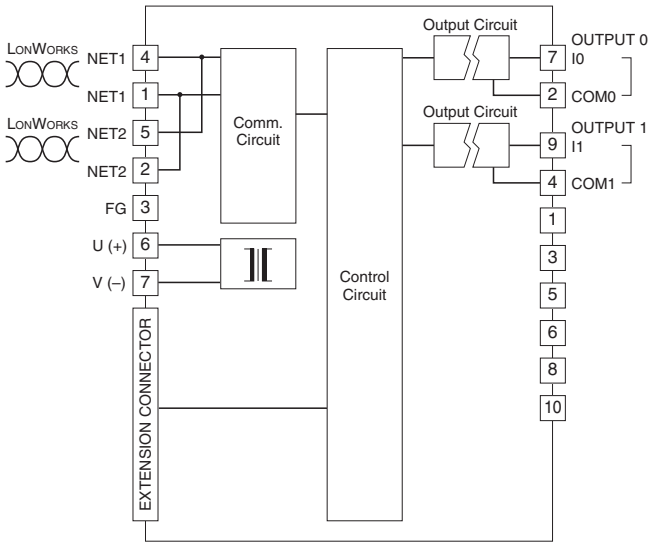

MG CO., LTD.
www.mgco.jp

REMOTE CONTROL RELAY CONTROL MODULE, 8 points

MODEL: R7L-RR8

RECOMMENDED PRODUCTS (OPERATION CHECKED)

Remote control relay:
BR-12D, BR-22D (Mitsubishi Electric)
WR6165 (Panasonic)
Remote control transformer:
BRT-10B, BRT-20B (Mitsubishi Electric)
WR2301 (Panasonic)

SPECIFICATIONS

Common: Common per all points
Number of I/O: Output, 8 points
Maximum outputs applicable at once: No limit
I/O status indicator: Feedback input status turns on with the input supplied.
Output status LED turns on with the output ON.
Isolation: Output to LonWorks or FG or power
Rated load voltage: 24 V AC ±10 % (supplied by the remote control transformer)
Load voltage frequency: 50 / 60 Hz

FUNCTIONAL BLOCKS

The following Functional Blocks are usable. Refer to the instruction manual for detailed information.

- NodeObject (extension module setting)
- fbCMP (compare)
- fbRR (remote control relay control output)
- fbDOEX (discrete output, extension module)
- fbDIEX (discrete input, extension module)

TERMINAL ASSIGNMENTS

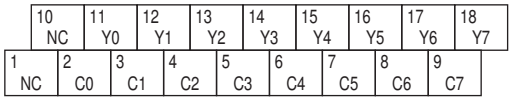

NO.	ID	FUNCTION	NO.	ID	FUNCTION
1	NC	No connection	10	NC	No connection
2	C0	Common	11	Y0	Output 0
3	C1	Common	12	Y1	Output 1
4	C2	Common	13	Y2	Output 2
5	C3	Common	14	Y3	Output 3
6	C4	Common	15	Y4	Output 4
7	C5	Common	16	Y5	Output 5
8	C6	Common	17	Y6	Output 6
9	C7	Common	18	Y7	Output 7

CIRCUIT DIAGRAM

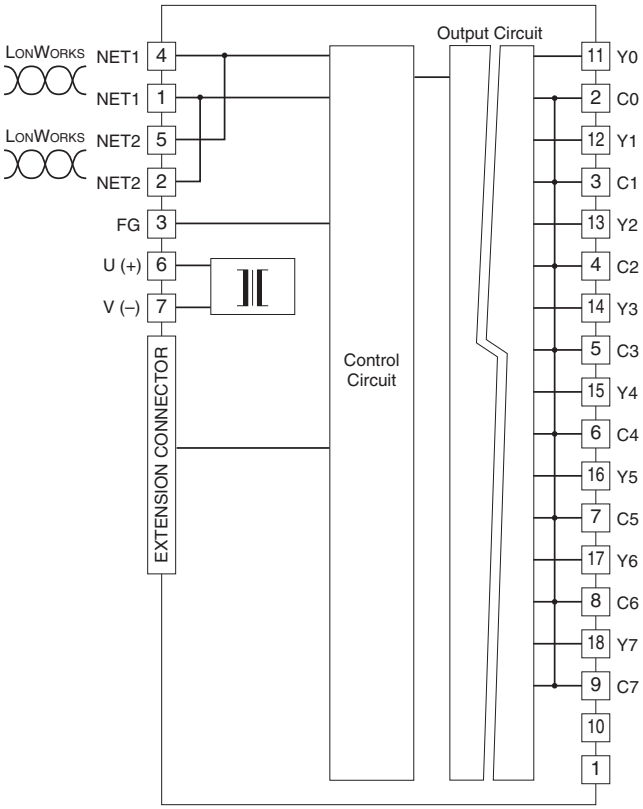

■ **Output Connection Example**

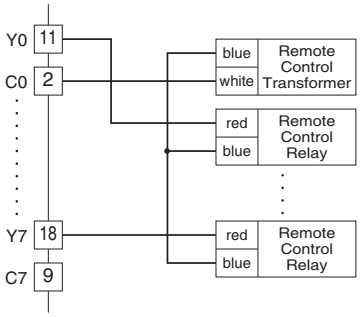

MG CO., LTD.
www.mgco.jp

DISCRETE INPUT EXTENSION MODULE, 8 points

MODEL: R7L-EA8

SPECIFICATIONS

Common: Positive or negative common (NPN/PNP) per 8 points
Number of I/O: Input, 8 points
Maximum inputs applicable at once: No limit (at 24 V DC)
Input status indicator: LED turns ON with contact ON
Isolation: Input to internal circuits
Rated input voltage: 24 V DC ±10 %; ripple 5 %p-p max.
ON voltage / current: ≥ 15 V DC (input – COM) / ≥ 3.5 mA
OFF voltage / current: ≤ 5 V DC (input – COM) / ≤ 1 mA
Input current: ≤ 5.5 mA per point at 24 V DC
Input resistance: Approx. 4.4 kΩ

TERMINAL ASSIGNMENTS

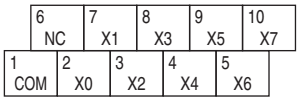

NO.	ID	FUNCTION	NO.	ID	FUNCTION
1	COM	Common	6	NC	No Connection
2	X0	Input 0	7	X1	Input 1
3	X2	Input 2	8	X3	Input 3
4	X4	Input 4	9	X5	Input 5
5	X6	Input 6	10	X7	Input 7

CIRCUIT DIAGRAM

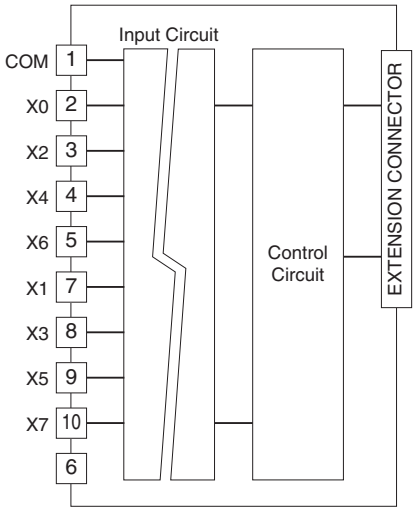

■ **Input Circuit**

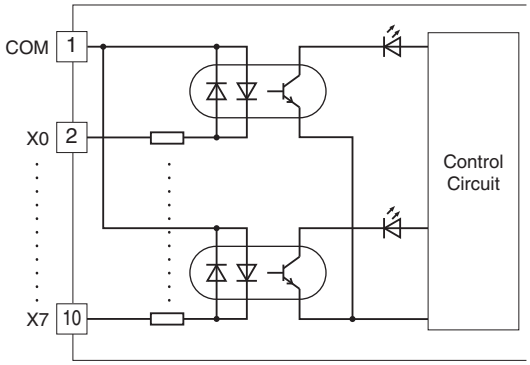

■ **Input Connection Examples**

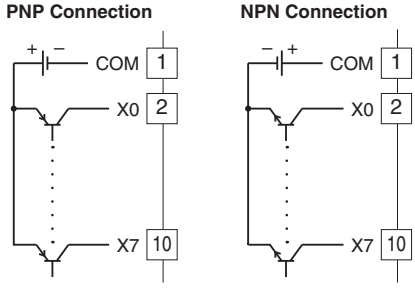

MG CO., LTD.
www.mgco.jp

DISCRETE INPUT EXTENSION MODULE, 16 points

MODEL: R7L-EA16

SPECIFICATIONS

Common: Positive or negative common (NPN/PNP) per 16 points
Number of I/O: Input, 16 points
Maximum inputs applicable at once: No limit (at 24 V DC)
Input status indicator: LED turns ON with contact ON
Isolation: Input to internal circuits
Rated input voltage: 24 V DC ±10 %; ripple 5 %p-p max.
ON voltage / current: ≥ 15 V DC (input – COM) / ≥ 3.5 mA
OFF voltage / current: ≤ 5 V DC (input – COM) / ≤ 1 mA
Input current: ≤ 5.5 mA per point at 24 V DC
Input resistance: Approx. 4.4 kΩ

TERMINAL ASSIGNMENTS

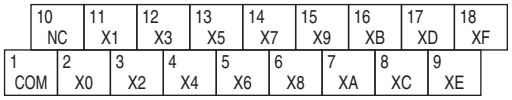

NO.	ID	FUNCTION	NO.	ID	FUNCTION
1	COM	Common	10	NC	No Connection
2	X0	Input 0	11	X1	Input 1
3	X2	Input 2	12	X3	Input 3
4	X4	Input 4	13	X5	Input 5
5	X6	Input 6	14	X7	Input 7
6	X8	Input 8	15	X9	Input 9
7	XA	Input 10	16	XB	Input 11
8	XC	Input 12	17	XD	Input 13
9	XE	Input 14	18	XF	Input 15

CIRCUIT DIAGRAM

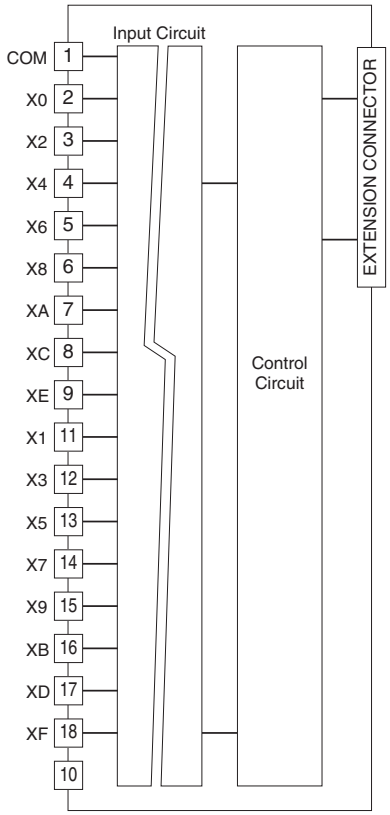

■ **Input Circuit**

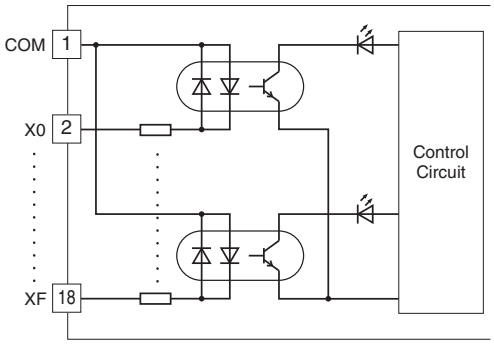

■ **Input Connection Examples**

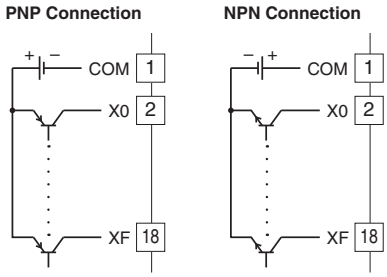

MG CO., LTD.
www.mgco.jp

NPN TRANSISTOR OUTPUT EXTENSION MODULE, 8 points

MODEL: R7L-EC8A

SPECIFICATIONS

Common: Negative common (NPN) per 8 points
Number of I/O: Output, 8 points
Maximum outputs applicable at once: No limit (at 24 V DC)
Output status indicator: LED turns ON with contact ON
Isolation: Output to internal circuits
Rated load voltage: 24 V DC ±10 %
Rated output current: 0.25 A per point, 2.0 A per common
Residual voltage: ≤ 1.2 V
Leakage current: ≤ 0.1 mA
(When driving an inductive load, connect a diode in parallel with the load.)

TERMINAL ASSIGNMENTS

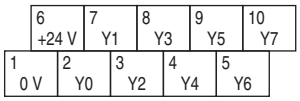

NO.	ID	FUNCTION	NO.	ID	FUNCTION
1	0 V	0 V (common)	6	+24 V	24 V DC
2	Y0	Output 0	7	Y1	Output 1
3	Y2	Output 2	8	Y3	Output 3
4	Y4	Output 4	9	Y5	Output 5
5	Y6	Output 6	10	Y7	Output 7

CIRCUIT DIAGRAM

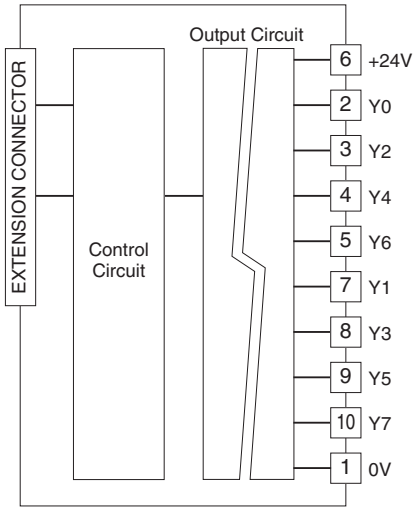

■ **Output Circuit**

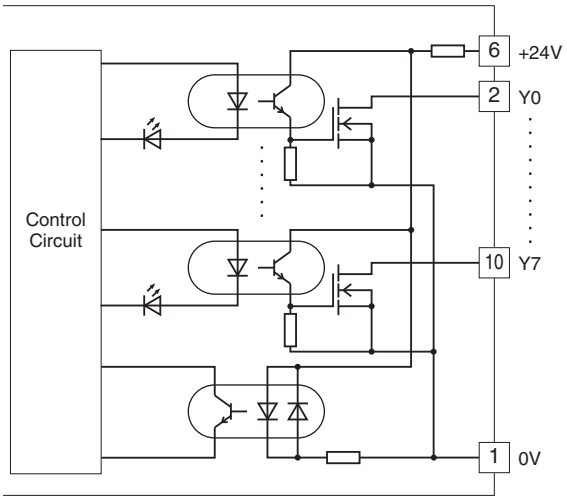

■ **Output Connection Example**

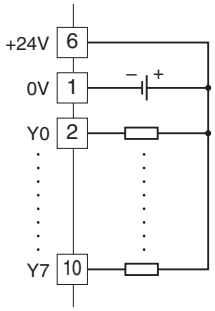

MG CO., LTD.
www.mgco.jp

NPN TRANSISTOR OUTPUT EXTENSION MODULE, 16 points

MODEL: R7L-EC16A

SPECIFICATIONS

Common: Negative common (NPN) per 16 points
Number of I/O: Output, 16 points
Maximum outputs applicable at once: No limit (at 24 V DC)
Output status indicator: LED turns ON with contact ON
Isolation: Output to internal circuits
Rated load voltage: 24 V DC ±10 %
Rated output current: 0.25 A per point, 2.0 A per common
Residual voltage: ≤ 1.2 V
Leakage current: ≤ 0.1 mA
(When driving an inductive load, connect a diode in parallel with the load.)

TERMINAL ASSIGNMENTS

NO.	ID	FUNCTION	NO.	ID	FUNCTION
1	0 V	0 V (common)	10	+24 V	24 V DC
2	Y0	Output 0	11	Y1	Output 1
3	Y2	Output 2	12	Y3	Output 3
4	Y4	Output 4	13	Y5	Output 5
5	Y6	Output 6	14	Y7	Output 7
6	Y8	Output 8	15	Y9	Output 9
7	YA	Output 10	16	YB	Output 11
8	YC	Output 12	17	YD	Output 13
9	YE	Output 14	18	YF	Output 15

CIRCUIT DIAGRAM

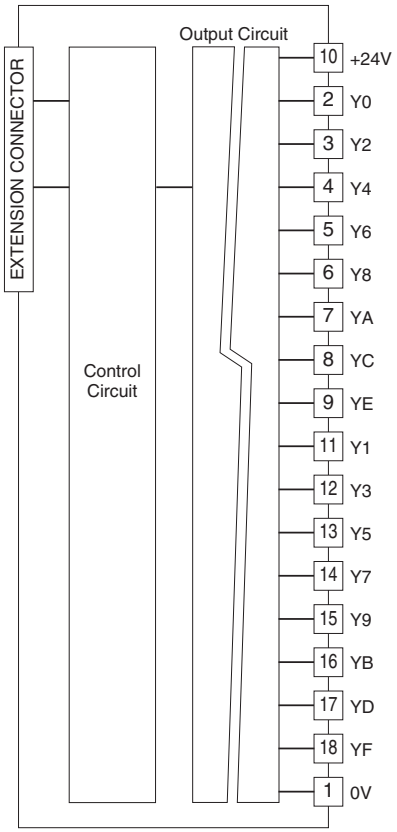

■ **Output Circuit**

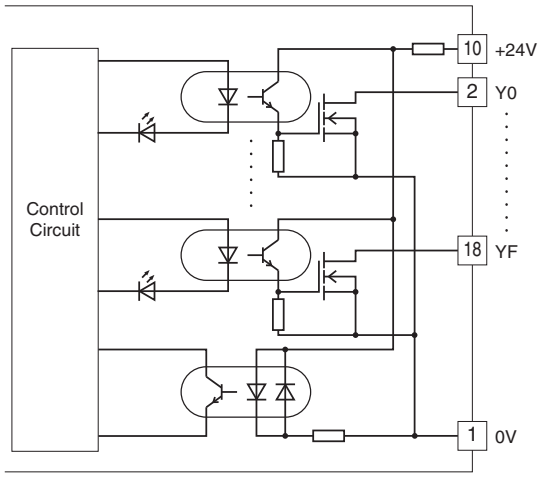

■ **Output Connection Example**

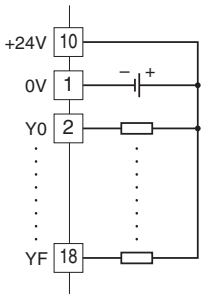

MG CO., LTD.
www.mgco.jp

PNP TRANSISTOR OUTPUT EXTENSION MODULE, 8 points

MODEL: R7L-EC8B

SPECIFICATIONS

Common: Positive common (PNP) per 8 points
Number of I/O: Output, 8 points
Maximum outputs applicable at once: No limit (at 24 V DC)
Output status indicator: LED turns ON with contact ON
Isolation: Output to internal circuits
Rated load voltage: 24 V DC ±10 %
Rated output current: 0.25 A per point, 2.0 A per common
Residual voltage: ≤ 1.2 V
Leakage current: ≤ 0.1 mA
(When driving an inductive load, connect a diode in parallel with the load.)

TERMINAL ASSIGNMENTS

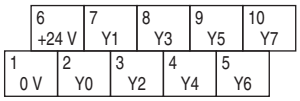

NO.	ID	FUNCTION	NO.	ID	FUNCTION
1	0 V	0 V	6	+24 V	24 V DC (common)
2	Y0	Output 0	7	Y1	Output 1
3	Y2	Output 2	8	Y3	Output 3
4	Y4	Output 4	9	Y5	Output 5
5	Y6	Output 6	10	Y7	Output 7

CIRCUIT DIAGRAM

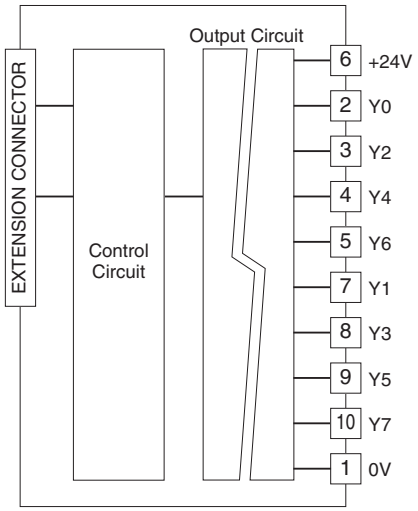

■ **Output Circuit**

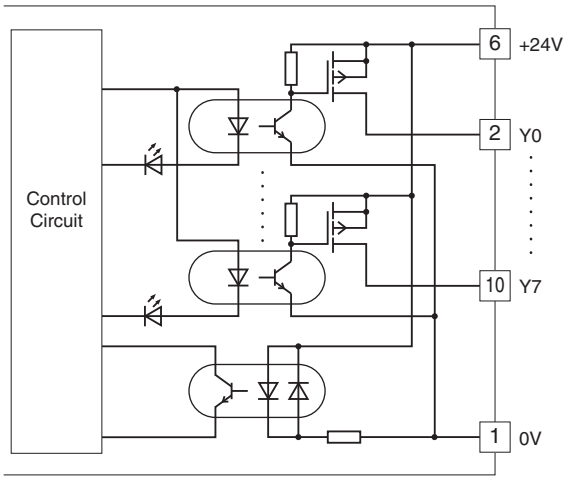

■ **Output Connection Example**

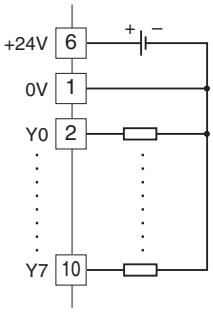

MG CO., LTD.
www.mgco.jp

PNP TRANSISTOR OUTPUT EXTENSION MODULE, 16 points

MODEL: R7L-EC16B

SPECIFICATIONS

Common: Positive common (PNP) per 16 points
Number of I/O: Output, 16 points
Maximum outputs applicable at once: No limit (at 24 V DC)
Output status indicator: LED turns ON with contact ON
Isolation: Output to internal circuits
Rated load voltage: 24 V DC ±10 %
Rated output current: 0.25 A per point, 2.0 A per common
Residual voltage: ≤ 1.2 V
Leakage current: ≤ 0.1 mA
(When driving an inductive load, connect a diode in parallel with the load.)

TERMINAL ASSIGNMENTS

NO.	ID	FUNCTION	NO.	ID	FUNCTION
1	0 V	0 V	10	+24 V	24 V DC (common)
2	Y0	Output 0	11	Y1	Output 1
3	Y2	Output 2	12	Y3	Output 3
4	Y4	Output 4	13	Y5	Output 5
5	Y6	Output 6	14	Y7	Output 7
6	Y8	Output 8	15	Y9	Output 9
7	YA	Output 10	16	YB	Output 11
8	YC	Output 12	17	YD	Output 13
9	YE	Output 14	18	YF	Output 15

CIRCUIT DIAGRAM

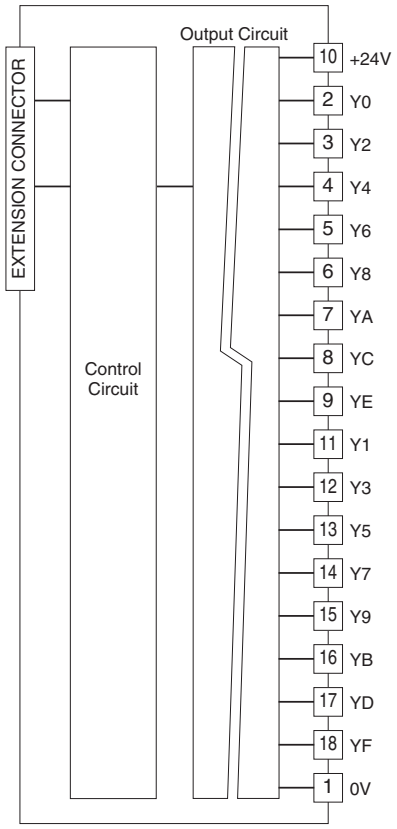

■ **Output Circuit**

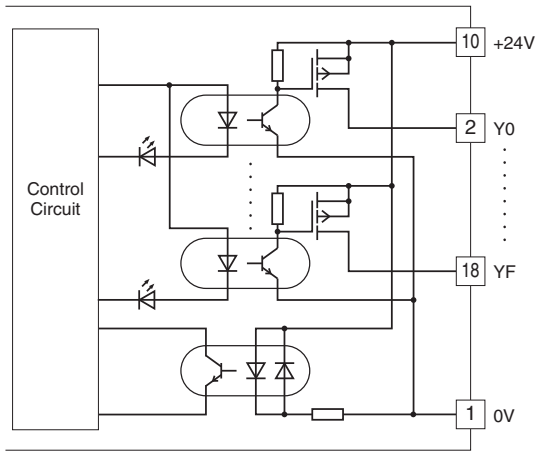

■ **Output Connection Example**

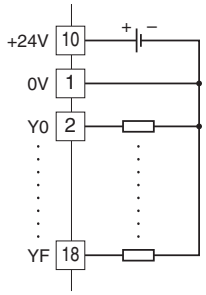

MG CO., LTD.
www.mgco.jp

⚠ Specifications are subject to change without notice.

MG CO., LTD.
www.mgco.jp

CUSTOM SPECIFICATION : OPTION /X2

MODEL: R7L-[1]-AR/X2/A[2]

Same as standard specification (without customization) except followings.
Refer to standard specification pages.

ORDERING INFORMATION

• Basic module: R7L-[1]-AR/X2/A[2]
Specify a code from below for each of [1] and [2].
(e.g. R7L-DAC16-AR/X2/A)
• Extension module is not selectable.

SPECIFICATION CHANGES

· Set preset value of the pulse counter to writable via LON.
· When momentary mode 2, switching the ON/OFF signal instantly, R7L- DAC16 does not outputs later signal until finishing to output prior signal (only for discrete output module).
· While control output, receiving control signals several times, R7L-DAC16 memories the last control signal and outputs it after finishing the control output (only for discrete output module).

MG CO., LTD.
www.mgco.jp